CATALOG OF REPLACEMENT PARTS



27117

VC5E CONVECTION OVEN

ML-147037

VC5ED-11D1
VC5ED-12D1
VC5ED-13D1

 © VULCAN-HART COMPANY 2024

Table of Contents

5 CONTROL PANEL (BEFORE S/N 482010857)

7 CONTROL PANEL (STARTING S/N 482010857)

9 ELECTRICAL COMPONENTS AND HEATING ELEMENT (BEFORE S/N 482010857)

11 ELECTRICAL COMPONENTS AND HEATING ELEMENT (STARTING S/N 482010857)

13 CONVECTION MOTOR (BEFORE 4/23/18)

15 CONVECTION MOTOR (BEFORE S/N 482010857)

17 CONVECTION MOTOR (S/N 482010857 THRU S/N 482024443)

19 CONVECTION MOTOR (STARTING S/N 482024444)

21 DOOR ASSEMBLY (BEFORE S/N 482010857)

23 DOOR ASSEMBLY (STARTING S/N 482010857)

25 PANELS (BEFORE S/N 482010857)

27 PANELS (STARTING S/N 482010857)

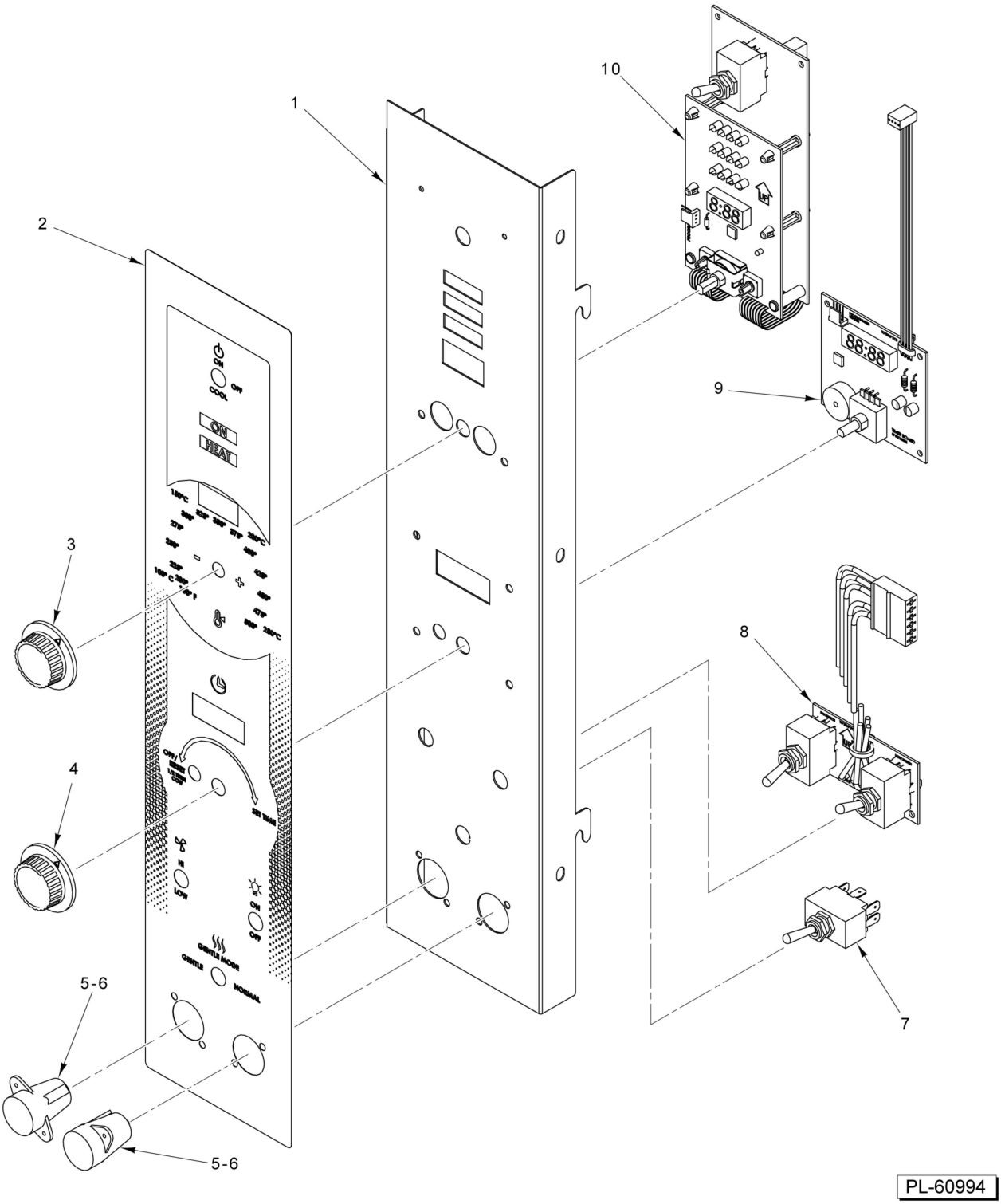

CONTROL PANEL
(BEFORE S/N 482010857)

CONTROL PANEL
(BEFORE S/N 482010857)

ILLUS. PL-60994	PART NO.	NAME OF PART	AMT.
1	00-960318-000G1	Panel	1
2	00-961207-00001	Overlay	1
3	00-960329-00001	Knob	1
4	00-960329-00002	Knob	1
5	FE-023-55	Holder - Fuse (15 Amp., 300 V.)	2
6	FE-019-40	Fuse (15 Amp., 600 V.)	2
7	00-340324-00012	Switch (S.P.S.T.)	1
8	00-960302-00001	Switch Board (Fan Speed & Light)	1
9	00-960301-00001	Timer Board	1
10	00-960314-00001	Control Board Assy. (Temperature & Main Power Switch)	1

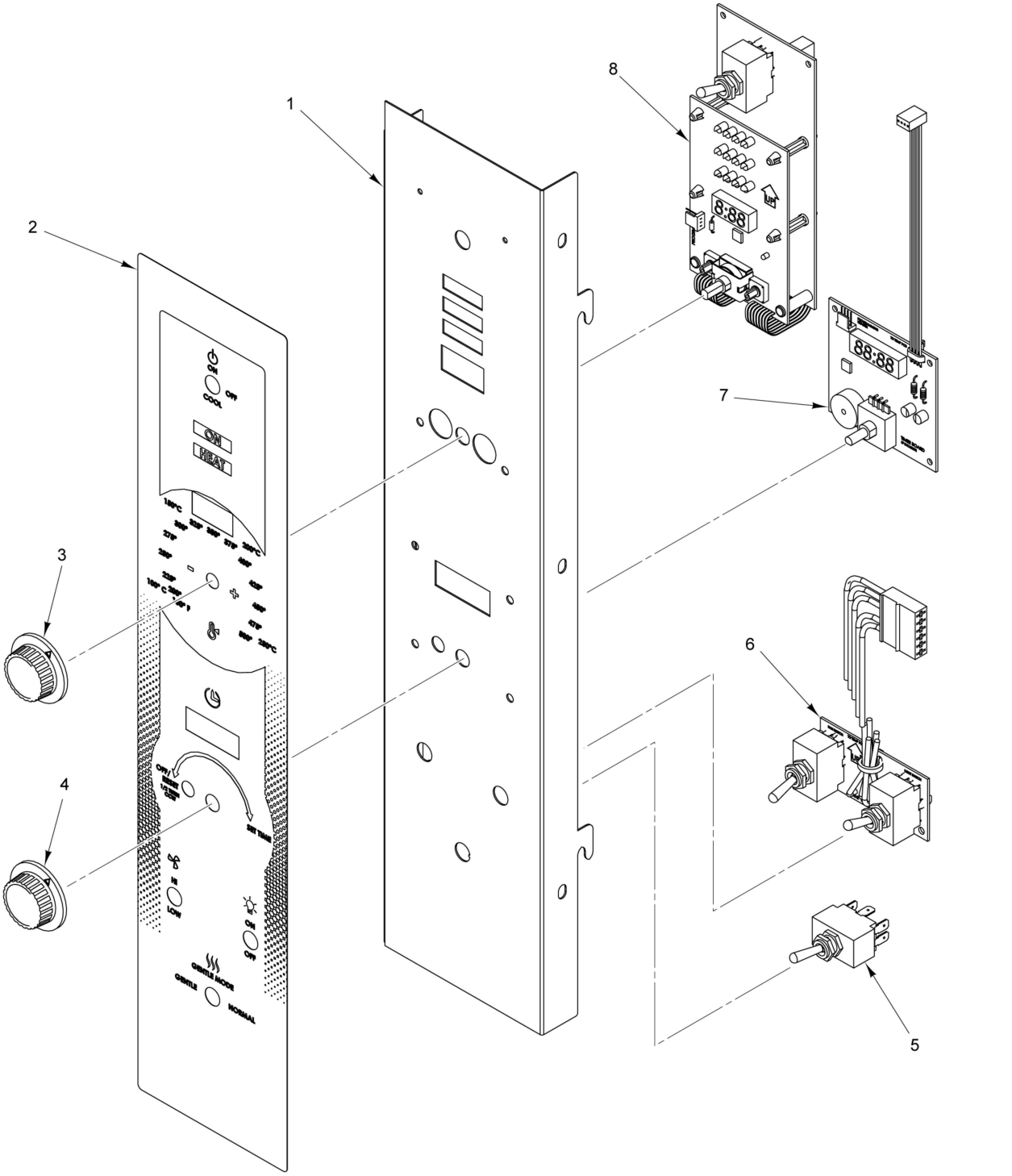

CONTROL PANEL
(STARTING S/N 482010857)

CONTROL PANEL
(STARTING S/N 482010857)

ILLUS. PL-61677	PART NO.	NAME OF PART	AMT.
1	00-962231-000G1	Panel - Control	1
2	00-962339-00001	Overlay	1
3	00-960329-00001	Knob	1
4	00-960329-00002	Knob	1
5	00-340324-00012	Switch (S.P.S.T.)	1
6	00-960302-00001	Switch Board (Fan Speed & Light)	1
7	00-960301-00001	Timer Board	1
8	00-960314-00001	Control Board Assy. (Temperature & Main Power Switch)	1

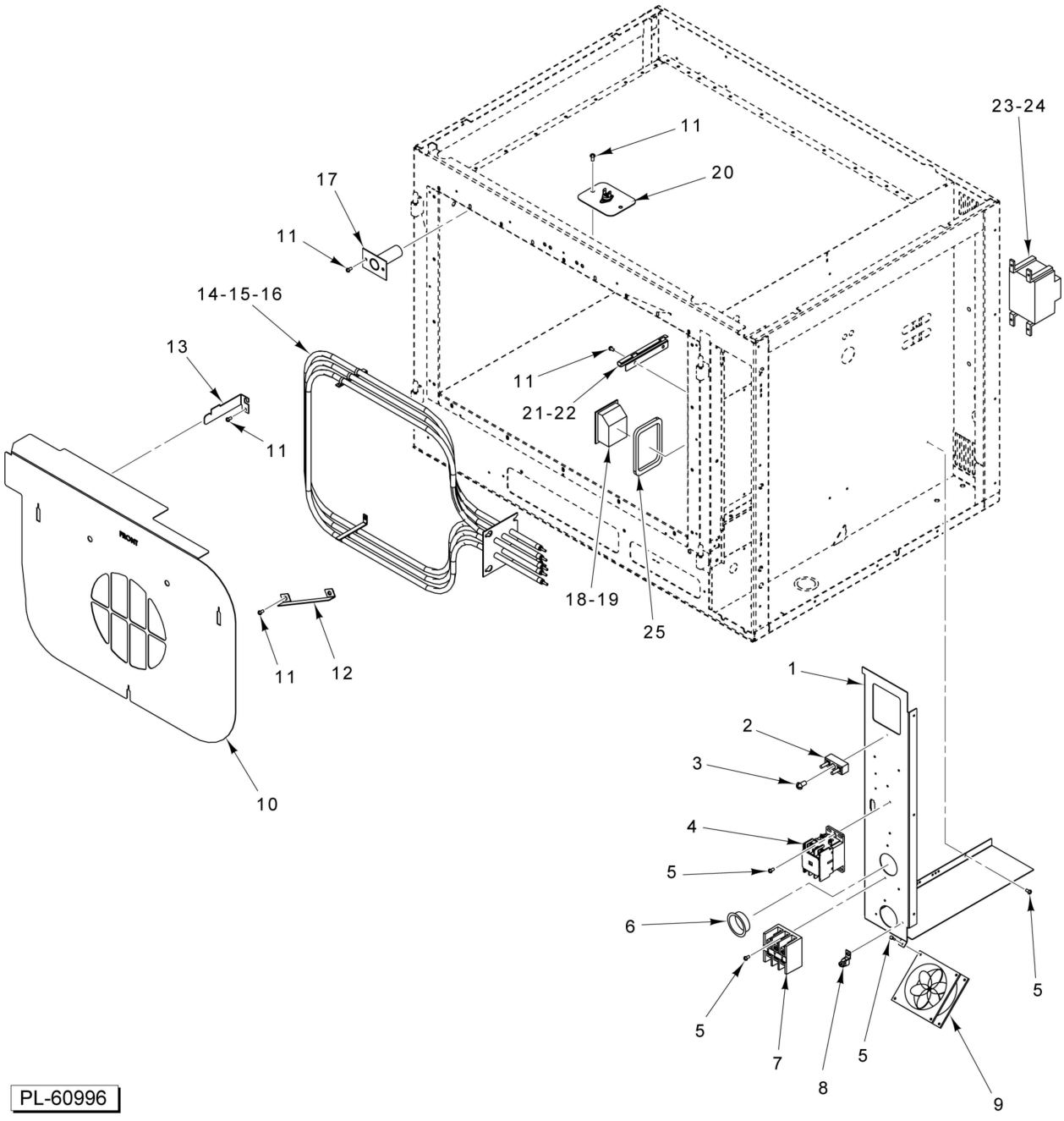

ELECTRICAL COMPONENTS AND HEATING ELEMENT
(BEFORE S/N 482010857)

ELECTRICAL COMPONENTS AND HEATING ELEMENT (BEFORE S/N 482010857)

ILLUS. PL-60996	PART NO.	NAME OF PART	AMT.
1	00-959693-00001	Panel - Component	1
2	00-417934-000G1	Block Assy. - Porcelain	1
3	SD-034-52	Self-Tapping Screw 8-32 x 1 Slotted. Hex Washer Hd., Type T	AR
4	00-411497-000C5	Contactor (3-Pole)	1
5	SD-032-07	Self-Tapping Screw 10-24 x 1/2 Hex. Hex Washer Hd., Type TT	AR
6	FE-024-23	Bushing - Electrical (Snap)	2
7	00-410472-00008	Block - Terminal (3-Pole)	1
8	00-417856-00001	Lug - Grounding (With Set Screw)	1
9	00-424940-00002	Fan - Cooling (230 V.)	1
10	00-960123-00001	Cover - Fan	1
11	SD-039-78	Self-Tapping Screw	AR
12	00-960052-00001	Baffle	1
13	00-959908-00001	Hook - Fan Cover	3
14	00-959747-00001	Element - Heating (208 V.)	1
15	00-959747-00002	Element - Heating (240 V.)	1
16	00-959747-00003	Element - Heating (480 V.)	1
17	00-354431-00001	Flue Assy	1
18	00-959957-00001	Light Assy. (240 V.)	1
19	00-961291-00002	Bulb - Halogen (230V) (240V) (40W)	1
20	00-958827-000G1	Thermostat (High Limit) (With Mounting Plate)	1
21	00-959753-00001	Probe Guard & Retainer	1
22	00-353589-00001	Probe Temperature (SST) Solid State	1
23	00-960267-00001	Transformer (480 V. to 240 V.) (480 V.)	1
24	00-960054-000G1	Wire Set (480 V.)	1
25	00-962843-000G1	Kit - Oven Light Gaskets	2

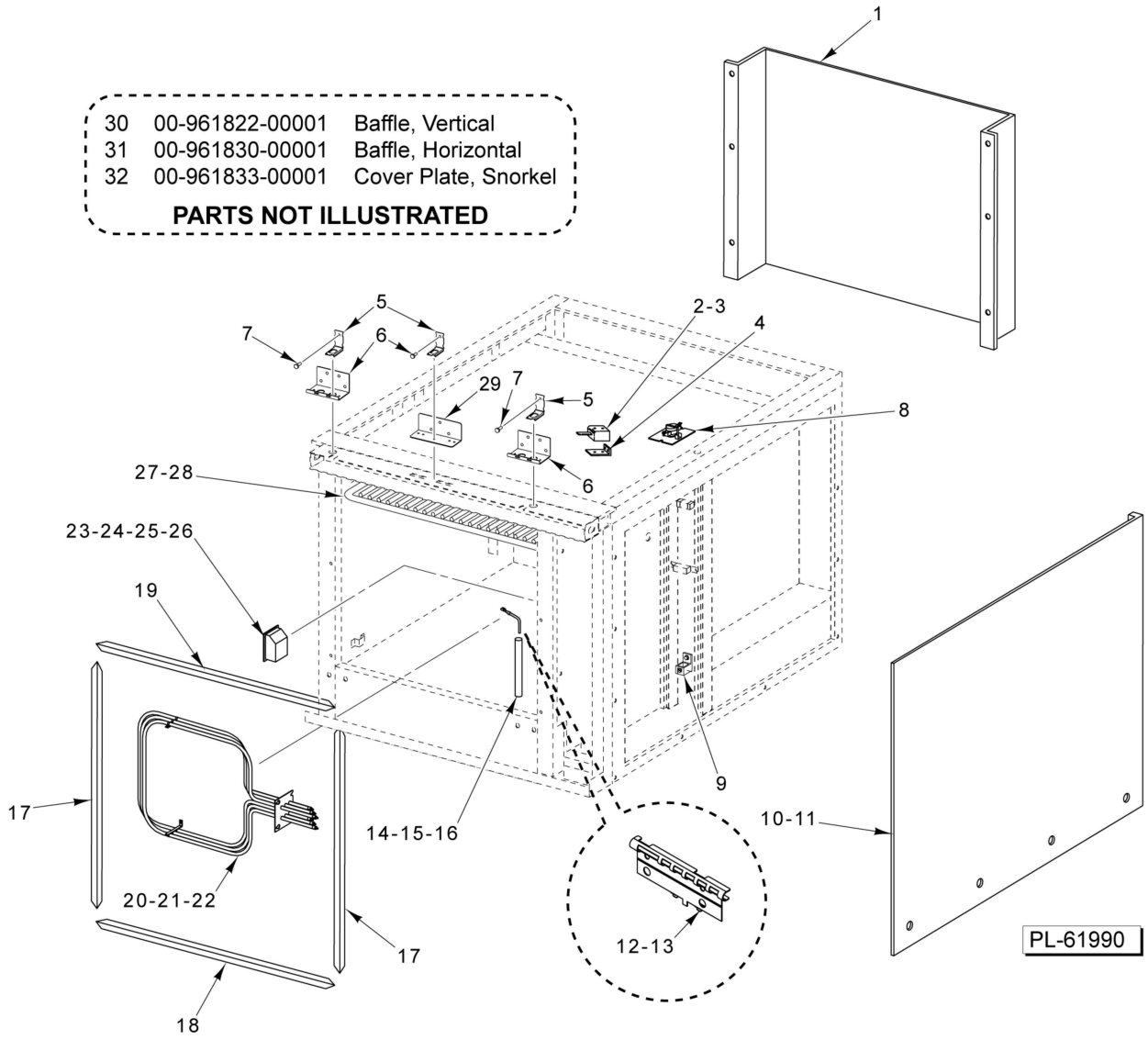

ELECTRICAL COMPONENTS AND HEATING ELEMENT
(STARTING S/N 482010857)

ELECTRICAL COMPONENTS AND HEATING ELEMENT (STARTING S/N 482010857)

ILLUS. PL-61990	PART NO.	NAME OF PART	AMT.
1	00-424840-00002	Panel - Back (SST) (Optional)	1
2	00-411496-000F1	Switch - Micro	1
3	SD-034-47	Self-Tapping Screw 6-32 x 1 Slotted. Hex Washer Hd., Type T	2
4	00-425324-00001	Bracket - Door Switch	AR
5	00-961587-00001	Clip - Hold Down	2
6	00-961656-00001	Support - Door (Upper)	2
7	00-922154	Screw 1/4-20 x 1 Hex Hd	2
8	00-958827-000G3	Kit - Oven Limit Assy	1
9	00-417856-00001	Lug - Grounding (With Set Screw)	1
10	00-424140-00002	Panel - Outer (RH) (SST) (ML-126743, ML-126744, & ML-126745)	1
11	00-424228-00002	Panel - Outer (RH) (SST) (ML-126746, ML-126747, & ML-126748)	1
12	SD-032-07	Self-Tapping Screw 10-24 x 1/2 Hex. Hex Washer Hd., Type TT	2
13	00-959753-00001	Probe Guard & Retainer	1
14	00-353589-00001	Probe Temperature (SST) Solid State (ML-126743, ML-126744, ML-126746, & ML-126747)	1
15	00-920883-00001	Probe (ML-126745 & ML-126748)	1
16	00-342132-00002	Guard - Probe	1
17	00-959771-00001	Seal - Door (Side)	2
18	00-959772-00001	Seal - Door (Bottom)	1
19	00-959770-00001	Seal - Door (Top)	1
20	00-959747-00001	Element - Heating (208 V.)	1
21	00-959747-00002	Element - Heating (240 V.)	1
22	00-959747-00003	Element - Heating (480 V.)	1
23	00-960194-00001	Oven Lamp (40W) (120 V.)	2
24	00-961766-00001	Oven Lamp (40W) (240 V.)	2
25	00-961291-00001	Bulb - Halogen (120V)	AR
26	00-961291-00002	Bulb - Halogen (230V)	AR
27	00-411265-00022	Rack Assy. (ML-126743, ML-126744, & ML-126745)	AR
28	00-411265-00010	Rack Assy. (ML-126746, ML-126747, & ML-126748)	AR
29	00-961658-00001	Support - Door Catch	1
30	00-961822-00001	Baffle, Vertical	1
31	00-961830-00001	Baffle, Horizontal	1
32	00-961833-00001	Cover Plate, Snorkel	1

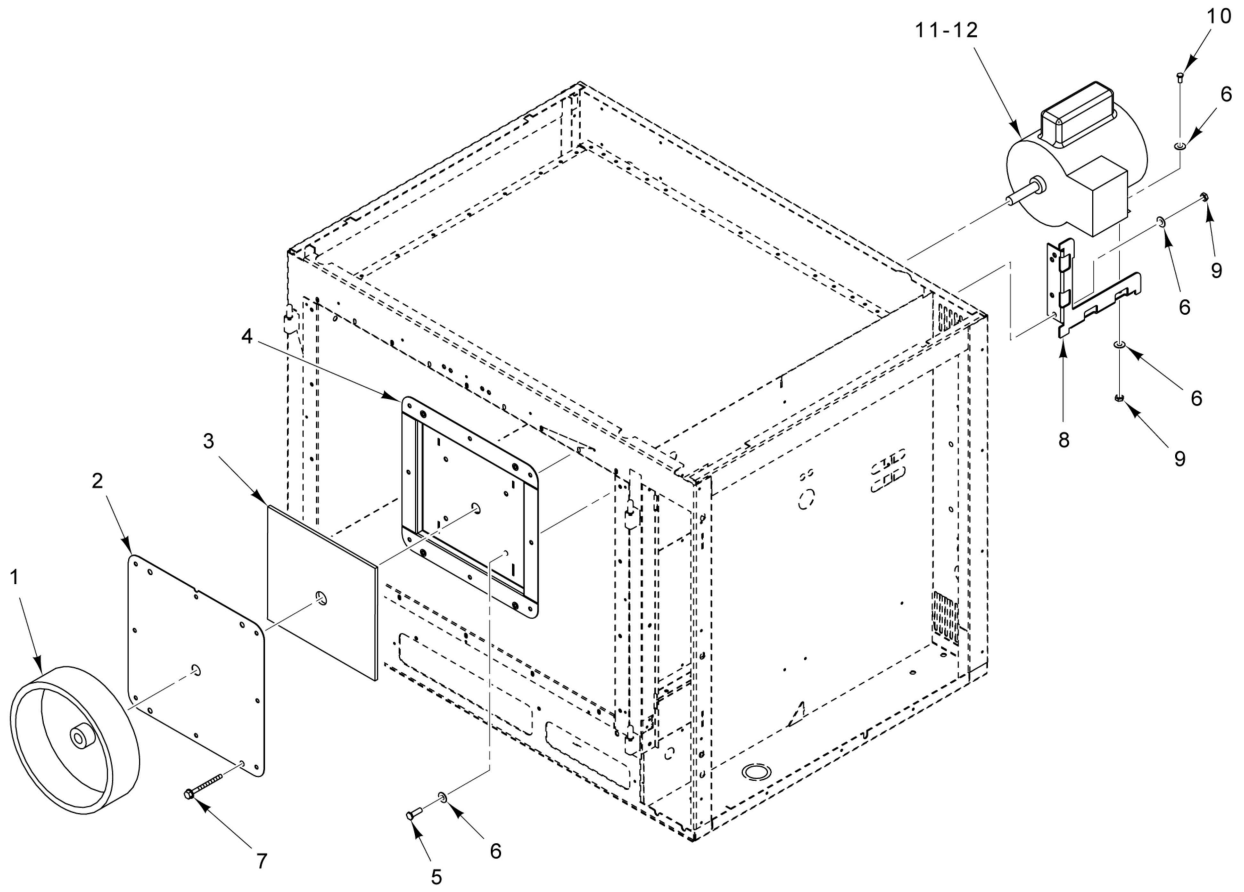

CONVECTION MOTOR
(BEFORE 4/23/18)

CONVECTION MOTOR
(BEFORE 4/23/18)

ILLUS. PL-60997	PART NO.	NAME OF PART	AMT.
1	00-415780-00003	Wheel - Blower (60 Hz.)	1
2	00-959698-00001	Cover - Motor	1
3	00-959955-00001	Insulation	1
4	00-959695-00001	Mount - Motor	1
5	SC-113-65	Cap Screw 5/16-18 x 1-1/4 Hex Hd	4
6	WS-029-46	Washer	16
7	SC-132-01	Screw	8
8	00-959803-00001	Bracket - Motor Mount	2
9	NS-046-86	Nut Assy. 5/16-18 KEPS Hex	8
10	SC-113-78	Cap Screw 1/4-20 x 3/4 Hex Hd	4
11	00-342285-00001	Bushing - Plastic	1
12	00-358516-00002	Motor 1/2 Hp. (2-Speed) (208-240 V., 50/60 Hz., 1 Ph.)	1

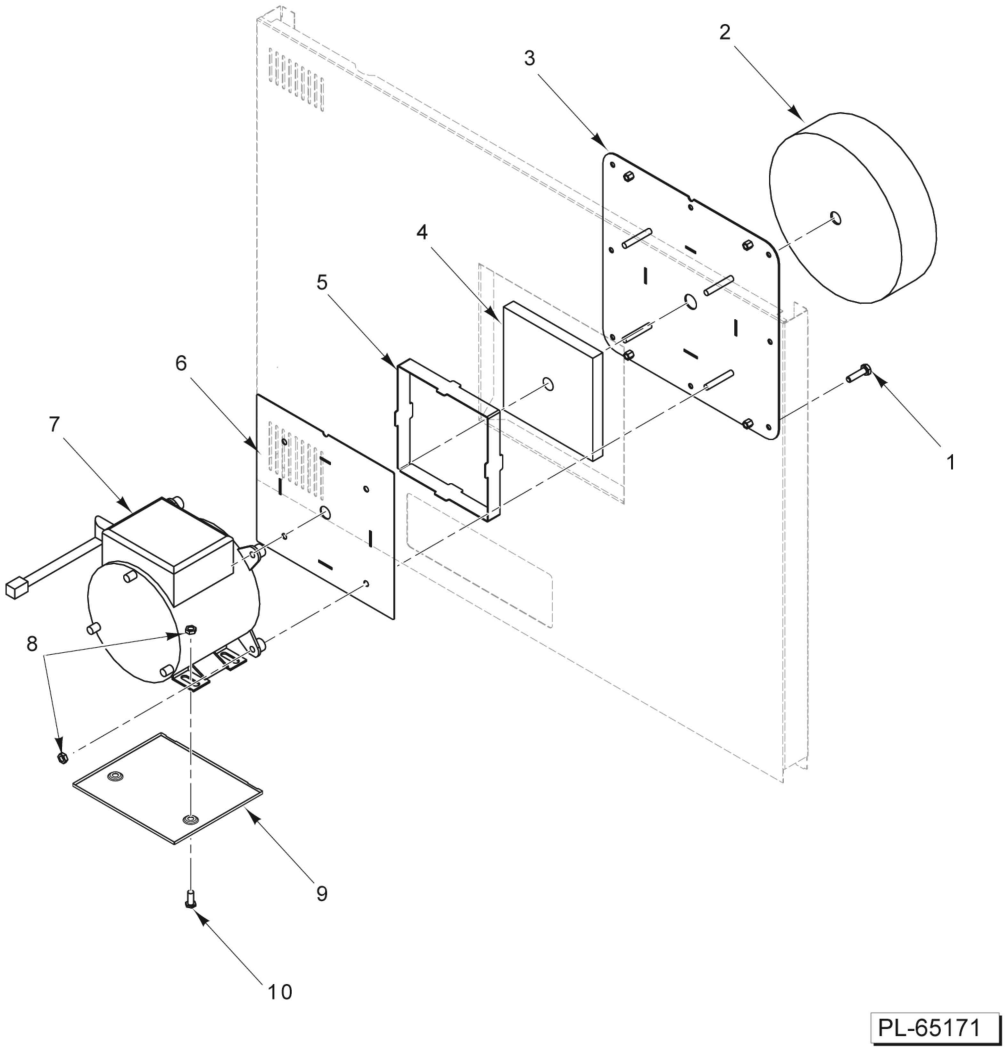

CONVECTION MOTOR
(BEFORE S/N 482010857)

CONVECTION MOTOR
(BEFORE S/N 482010857)

ILLUS. PL-65171	PART NO.	NAME OF PART	AMT.
1	SC-113-76	Cap Screw 1/4-20 x 1 Hex Hd	4
2	00-415780-00003	Wheel - Blower	1
3	00-960962-000G1	Mount - Motor, Front	1
4	00-342159-00033	Insulation (28 x 33 x 1 In.)	AR
5	00-960963-00001	Mount - Motor, Wrapper	1
6	00-960964-00001	Mount - Motor, Rear	1
7	00-961739-000G2	Motor, 208-240 VAC, 0.5 HP Motor Harness Included with Motor	AR
	00-962168-000G1	Motor Harness	AR
8	NS-046-86	Nut Assy. 5/16-18 KEPS Hex	6
9	00-961831-00001	Pan - Drip, Motor	1
10	SC-037-75	Cap Screw 5/16-18 x 3/4 Hex Hd	2

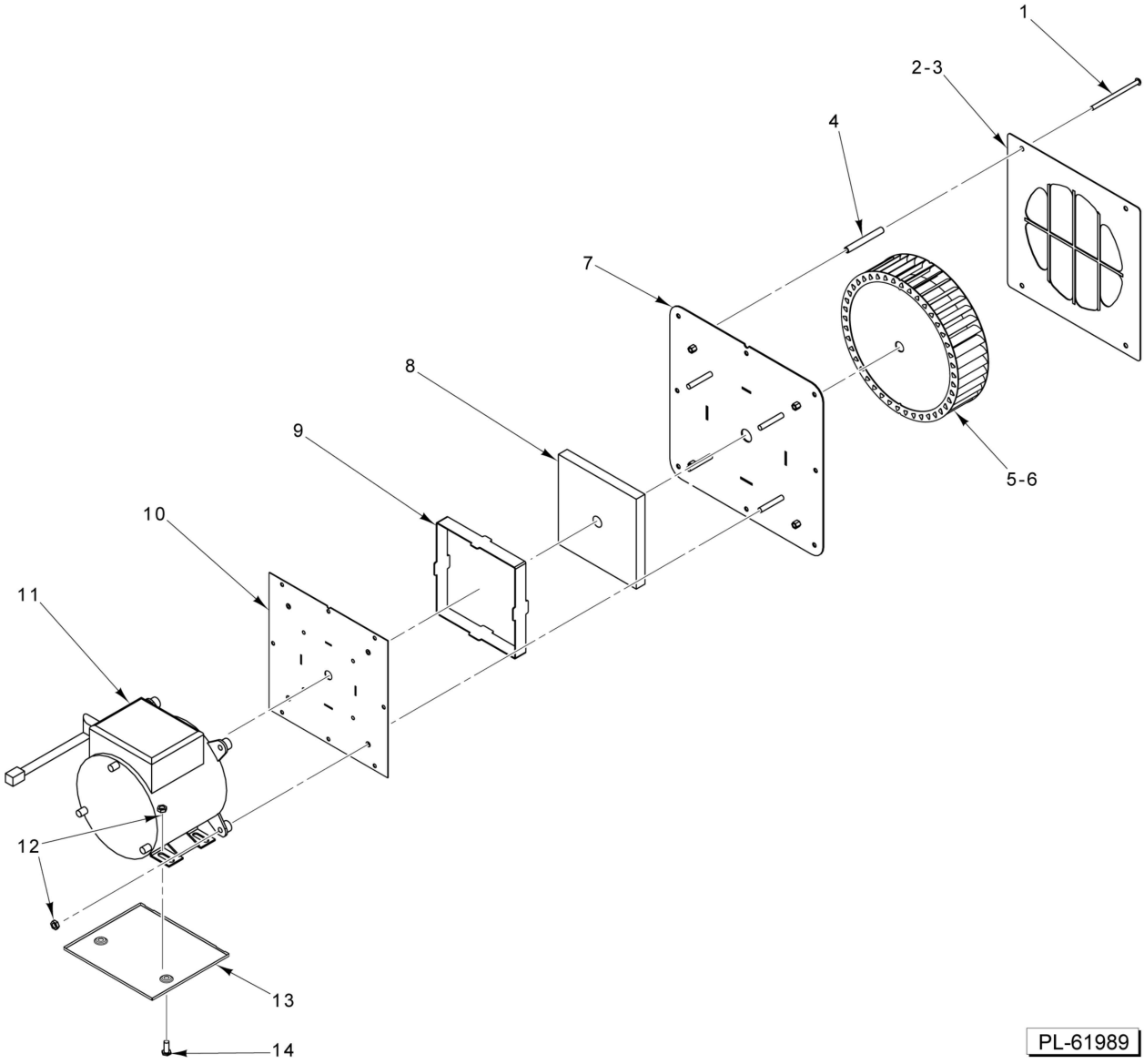

CONVECTION MOTOR
(S/N 482010857 THRU S/N 482024443)

CONVECTION MOTOR
(S/N 482010857 THRU S/N 482024443)

ILLUS. PL-61989	PART NO.	NAME OF PART	AMT.
1	SC-120-15	Mach. Screw 1/4-20 x 4 Rd. Hd	4
2	00-411136-00003	Cover - Fan (50 Hz.)	1
3	00-411136-00004	Cover - Fan (60 Hz.)	1
4	00-411289-00004	Spacer - Fan Housing	4
5	00-415780-00005	Wheel - Blower (50 Hz.)	1
6	00-415780-00003	Wheel - Blower (60 Hz.)	1
7	00-961671-000G1	Mount - Motor (Front) Motor Harness Included with Motor	1
	00-962168-000G1	Motor Harness	AR
8	00-342159-00033	Insulation (28 x 33 x 1 In.)	AR
9	00-960963-00001	Mount - Motor, Wrapper	1
10	00-961668-00001	Mount - Motor (Rear)	1
11	00-961739-000G2	Motor, 208-240 VAC, 0.5 HP	1
12	NS-046-86	Nut Assy. 5/16-18 KEPS Hex	6
13	00-961831-00001	Pan - Drip, Motor	1
14	SC-037-75	Cap Screw 5/16-18 x 3/4 Hex Hd	2

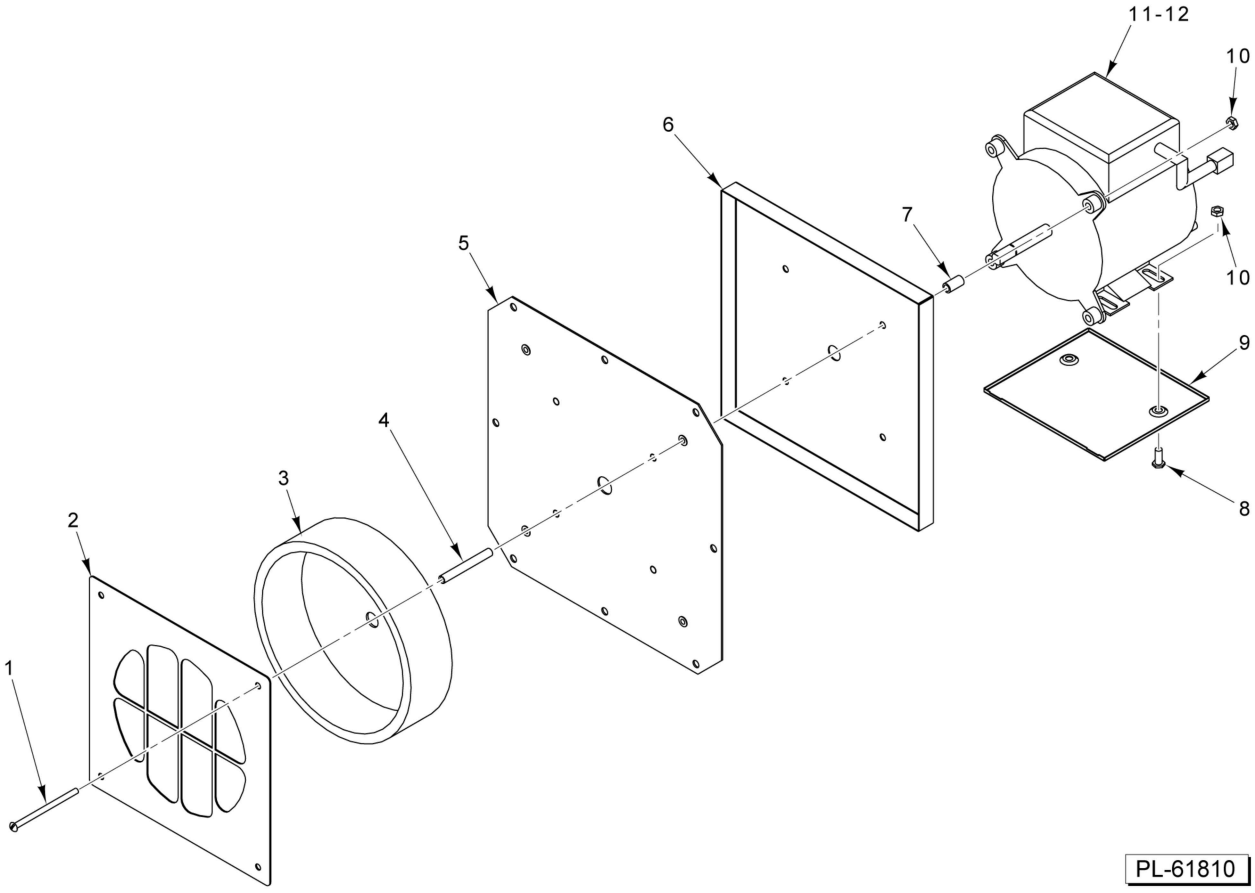

CONVECTION MOTOR
(STARTING S/N 482024444)

CONVECTION MOTOR
(STARTING S/N 482024444)

ILLUS. PL-61810	PART NO.	NAME OF PART	AMT.
1	SC-120-15	Mach. Screw 1/4-20 x 4 Rd. Hd	4
2	00-411136-00004	Cover - Fan (60 Hz.)	1
3	00-415780-00003	Wheel - Blower (60 Hz.)	1
4	00-411289-00001	Spacer - Fan Housing (1/8 Pipe x 27/8)	4
*5	00-962792-000G1	Motor Mount Assy	1
6	00-962791-00001	Plate - Motor Mount	1
7	00-962793	Spacer - Motor	4
8	SC-037-75	Cap Screw 5/16-18 x 3/4 Hex Hd	2
9	00-961831-00001	Pan - Drip, Motor	1
10	NS-046-86	Nut Assy. 5/16-18 KEPS Hex	6
11	00-961739-000G1	Motor, 120 VAC, 0.5 HP	1
12	00-961739-000G2	Motor, 208-240 VAC, 0.5 HP	1

* Before S/N 482046975 will need to order 00-962820-000G1 Motor Mount Kit

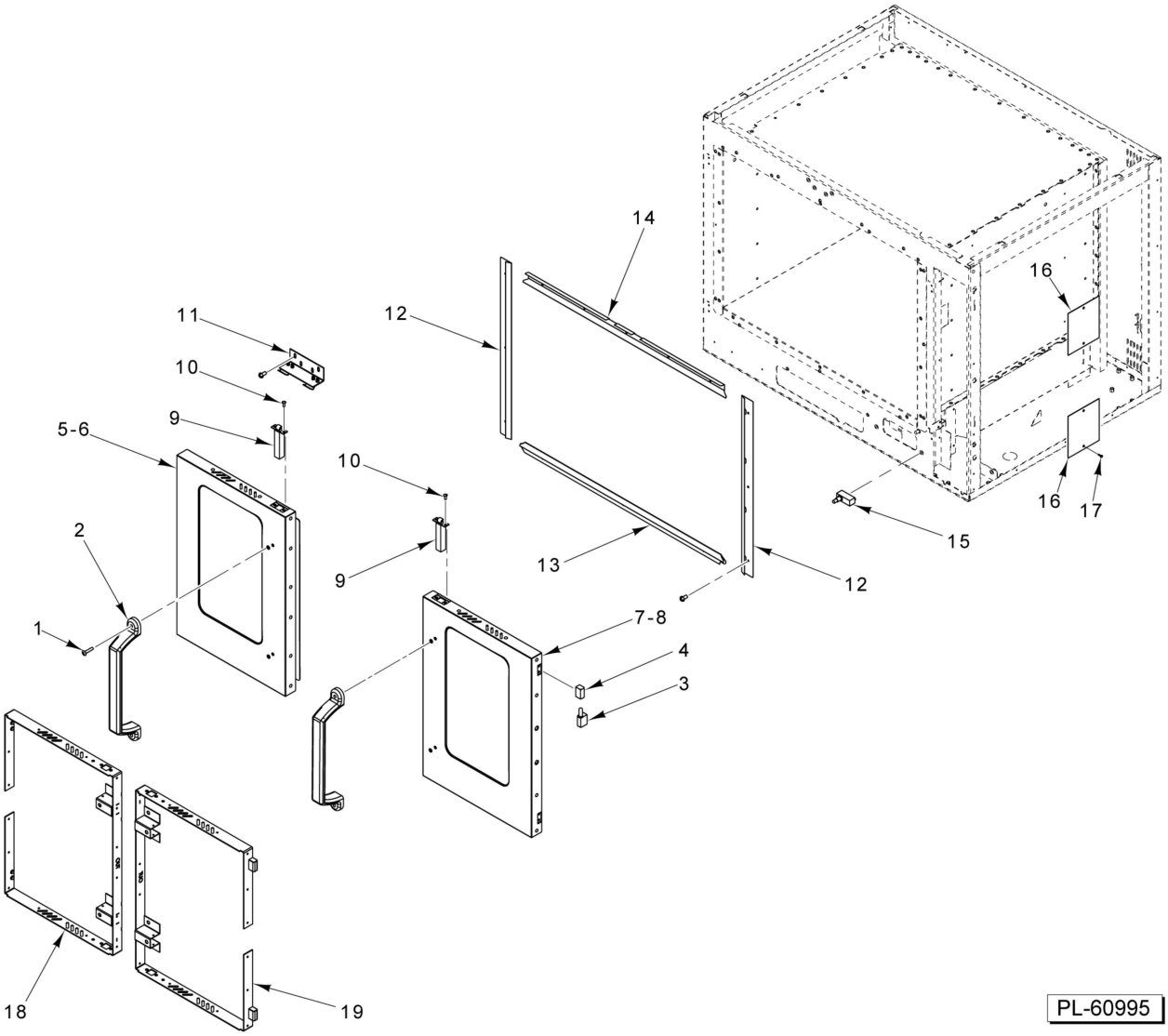

DOOR ASSEMBLY
(BEFORE S/N 482010857)

DOOR ASSEMBLY
(BEFORE S/N 482010857)

ILLUS. PL-60995	PART NO.	NAME OF PART	AMT.
1	00-959087-00001	Screw 1/4-20 x 1-1/4 Black Hd	4
2	00-957108-00001	Handle - Molded (Black)	2
3	00-959783-00001	Hinge - Male	4
4	00-959784-00001	Hinge - Female	4
5	00-962188-000G1	Panel - Door w/ Glass (Inner) (LH)	1
6	00-962189-000G1	Panel - Door w/ Glass (Outer) (LH)	1
7	00-962190-000G1	Panel - Door w/ Glass (Inner) (RH)	1
8	00-962191-000G1	Panel - Door w/ Glass (Outer) (RH)	1
9	00-497586-00001	Latch - Door Roller	2
10	SC-115-51	Mach. Screw 10-32 x 1/2 Phil. Truss Hd	4
11	00-960118-000G1	Bracket - Door Catch	1
	00-497585-00001	Plate - Strike	AR
12	00-959771-00001	Seal - Door (Side)	2
13	00-959772-00001	Seal - Door (Bottom)	1
14	00-959770-00001	Seal - Door (Top)	1
15	00-960053-00001	Switch - Door	1
16	00-959769-00001	Cover - Hinge Access	2
17	SD-032-07	Self-Tapping Screw 10-24 x 1/2 Hex. Hex Washer Hd., Type TT	4
18	00-962524-000G1	Frame - Door W/ Hinge (LH)	1
19	00-962524-000G2	Frame - Door W/ Hinge (RH)	1

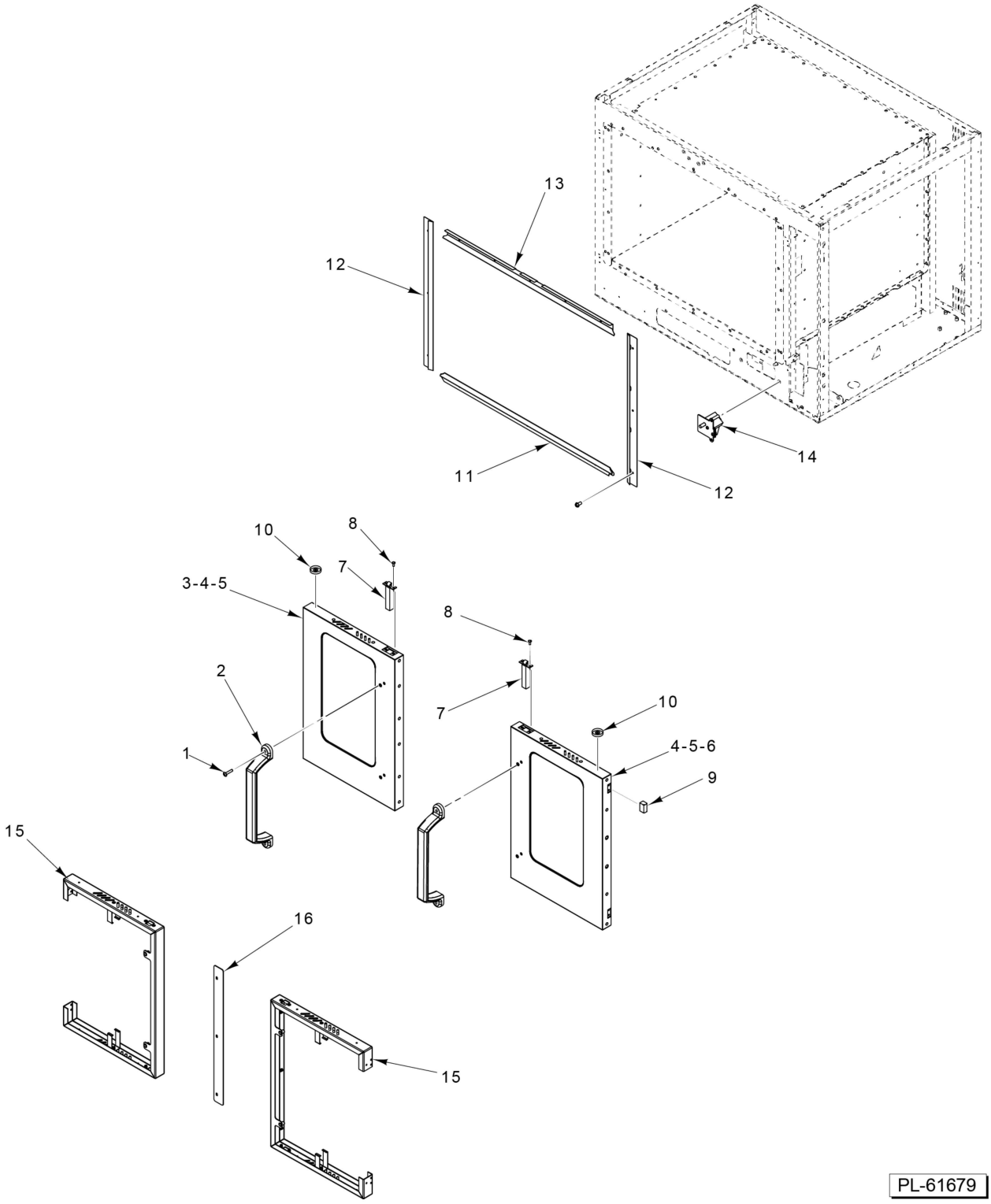

PL-61679

DOOR ASSEMBLY
(STARTING S/N 482010857)

DOOR ASSEMBLY
(STARTING S/N 482010857)

ILLUS. PL-61679	PART NO.	NAME OF PART	AMT.
1	00-959087-00001	Screw 1/4-20 x 1-1/4 Black Hd	4
2	00-957108-00001	Handle - Molded (Black)	2
3	00-962063-000G1	Door Assy. (LH) (Incls. Handle)	1
4	00-962594-000G1	Panel - Door w/Glass (Outer)	2
5	00-962595-000G1	Panel - Door w/Glass (Inner)	2
6	00-962064-000G1	Door Assy. (RH) (Incls. Handle)	1
7	00-497586-00001	Latch - Door Roller	2
8	SC-115-51	Mach. Screw 10-32 x 1/2 Phil. Truss Hd	4
9	00-962086-00001	Hinge - Female	4
10	00-962094-00001	Block - Stop	2
11	00-959772-00001	Seal - Door (Bottom)	1
12	00-959771-00001	Seal - Door (Side)	2
13	00-959770-00001	Seal - Door (Top)	1
14	00-962492-000G1	Door Switch Assy	1
15	00-962082-000G1	Frame Assy	2
16	00-357837-00001	Seal - Door End	1

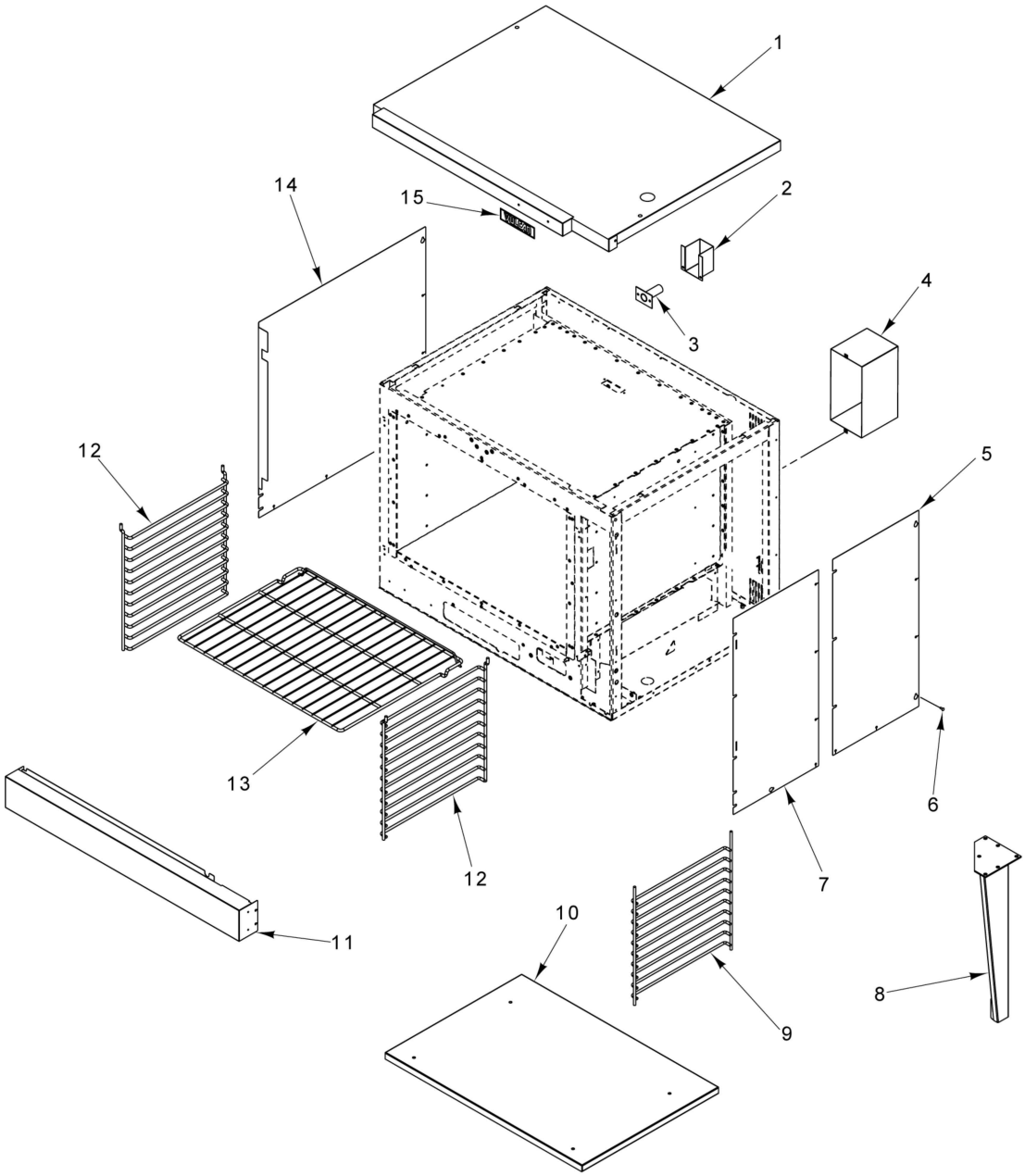

16	00-417063-00001	Strap	20	00-288946-00002	Foot
17	00-357047-00001	Caster - Swivel	21	00-343634-00001	Caster
18	00-357047-00002	Caster - Swivel	22	00-343634-00002	Caster
19	00-357093-00001	Ring - Locking	23	00-342150-00008	Leg

PARTS NOT ILLUSTRATED

PL-60998

PANELS
(BEFORE S/N 482010857)

PANELS
(BEFORE S/N 482010857)

ILLUS. PL-60998	PART NO.	NAME OF PART	AMT.
1	00-961507-000G1	Upper Cosmetic Assembly	1
2	00-427617-00001	Flue - Deflector	1
3	00-354431-00001	Flue Assy	1
4	00-427082-00001	Cover - Transformer (480 V.)	1
5	00-959793-00001	Panel - Cosmetic Right	1
6	SD-008-27	Self-Tapping Screw 10-16 x 1/2 Phil. Truss Hd., Type B	AR
7	00-959794-00001	Access Panel	1
8	00-424157-000G7	Leg Assembly for Caster and Foot (Painted Black)	4
9	00-959525-00001	Rack Guide Assy (For Stand)	AR
10	00-960125-00001	Shelf - Under Oven (For Stand)	AR
11	00-959922-00001	Trim - Cosmetic Bottom	1
12	00-959708-00001	Rack Guide Assy	2
13	00-959523-00001	Rack Assy	5
14	00-959688-00001	Panel - Cosmetic Left	1
15	00-957916-00001	Nameplate - Vulcan (7-1/4 In.)	1
16	00-417063-00001	Strap - Tie Down	AR
17	00-357047-00001	Caster - Swivel (Without Brake)	AR
18	00-357047-00002	Caster - Swivel (With Brake)	AR
19	00-357093-00001	Ring - Locking	AR
20	00-288946-00002	Foot - Adjustable (1-5/8) (SST)	AR
21	00-343634-00001	Caster (Swivel With Brake) (7.5 In.)	AR
22	00-343634-00002	Caster (Rigid) (7.5 In.)	AR
23	00-960288-000G1	Leg (8 In.)	AR

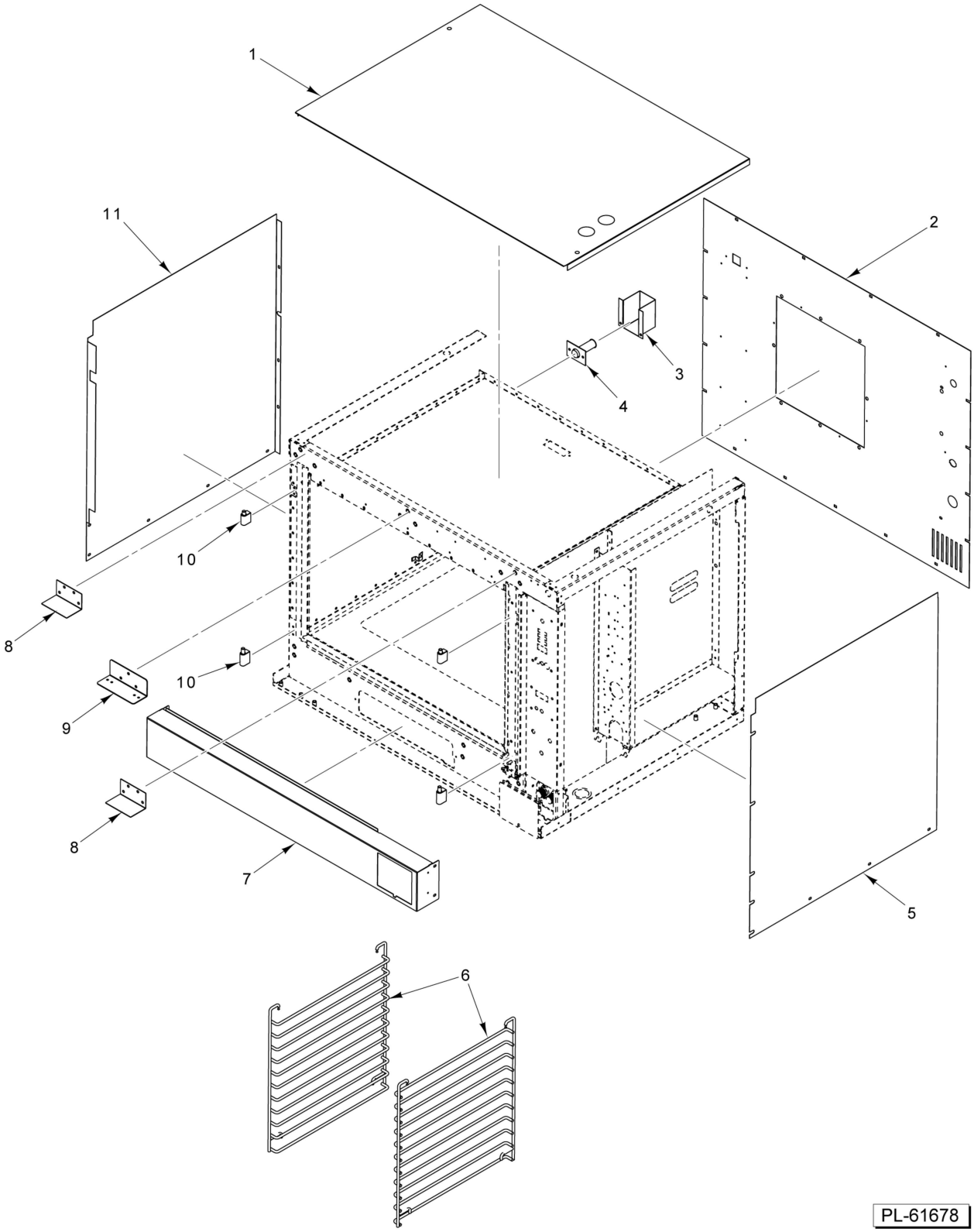

PANELS
(STARTING S/N 482010857)

PANELS
(STARTING S/N 482010857)

ILLUS. PL-61678	PART NO.	NAME OF PART	AMT.
1	00-424141-00002	Top (SST)	1
2	00-426839	Panel - Back Assy	1
3	00-427617-00001	Flue - Deflector	1
4	00-354431-00001	Flue Assy	1
5	00-424140-00002	Panel - Outer (RH) (SST)	1
6	00-428104-00001	Guide - Rack (LH)	2
7	00-962076-00001	Trim - Bottom	1
8	00-962167-00001	Trim - Top	2
9	00-961658-00001	Support - Door Catch	1
10	00-962809-000G1	Kit - Male Hinge	2
11	00-962084-00001	Panel - Outer (LH)	1