TRUE MANUFACTURING CO., INC.

INSTALLATION MANUAL

SPEC SERIES

Congratulations!

You have just purchased the finest commercial refrigerator available. You can expect many years of trouble-free operation.

Table of Contents

Safety Information
Safety Precautions & Proper Disposal....3

Prior to Installation
Ownership....4
Cabinet Location....4
Notice to Customer....4
Wire Gauge Chart....4

Installation
Uncrating....5
Leveling Leg, 6" Leveling Leg & Castor Installation....6
Leveling & Sealing the Cabinet to the Floor....7
Electrical Installation & Safety....8

Cabinet Setup
Shelf Installation....9
Heated Drain Pan Installation (Previous Design)....14
Heated Drain Pan Installation (Current Design)....15

Cabinet Operation
Startup, Temperature Control & Light Switch Location....16
General Sequence of Operation....17

Maintenance, Care & Cleaning
Condenser Coil Cleaning....18
Stainless Steel Care & Cleaning & 8 Tips to Help Prevent Rust....20

Cabinet Adjustments, Servicing & Component Replacement
Servicing & Replacing Components....21

Warranty
Warranty....23

STR2R-2S-HC

STA1R-1G-HC

STG2R-2G

INSTALLATION MANUAL

SPEC SERIES

Original Instructions

TRUE MANUFACTURING CO., INC.
2001 East Terra Lane • O'Fallon, Missouri 63366-4434
(636)-240-2400 • FAX (636)-272-2408 • International FAX (636)272-7546 • (800)-325-6152
Parts Department (800)-424- TRUE • Parts Department FAX# (636)-272-9471

North America – Canada and Caribbean
Warranty Phone +1 855-878-9277
Warranty Fax +1 636-980-8510
Warranty Email warrantyinquiries@truemfg.com
Technical Phone +1 855-372-1368
Technical Email service@truemfg.com
7:00 am–6:00 pm CST Monday–Friday,
8:00 am–12:00 pm Saturday

Mexico
Phone +52 555-804-6343/44
service-mexicocity@truemfg.com
9:00 am–5:30 pm M–F

Latin America
Phone: +52 555-804-6343/44
servicelatam@truemfg.com
9:00 am–5:30 pm M–F

UK, Ireland, Middle East, Africa & India
Phone: +44 (0) 800-783-2049
Service-emea@truemfg.com
8:30 am–5:00 pm M–F

Australia
Phone: +61 2-9618-9999
service-aus@truemfg.com
8:30 am–5:00 pm M–F

European Union & Commonwealth of Independent States
Phone: +49 (0) 7622-6883-0
service-emea@truemfg.com
8:00 am–5:00 pm M–F

991338-B

THANK YOU

FOR YOUR PURCHASE

How to Maintain Your True Refrigerator to Receive the Most Efficient and Successful Operation

You have selected one of the finest commercial refrigeration units made. It is manufactured under strict quality controls with only the best quality materials available. Your TRUE cooler, when properly maintained, will give you many years of trouble-free service.

WARNING – Use this appliance for its intended purpose as described in this Installation Manual.

Refrigerant Safety & Warning Information

See the serial label inside the cabinet for the units refrigeration type. For Hydrocarbon Refrigeration (R290 only), see below:

DANGER – Risk of fire or explosion. Flammable refrigerant used. **DO NOT** use mechanical devices to defrost refrigerator. **DO NOT** puncture refrigerant tubing; follow handling instructions carefully. To be repaired only by trained service personnel.

DANGER – Risk of fire or explosion (flammable refrigerant used), consult repair manual/owner's guide before attempting to service this product. All safety precautions must be followed. Dispose of properly in accordance with local and federal regulations. Follow all safety precautions.

CAUTION – Keep all ventilation openings clear of obstruction in the appliance enclosure or in the structure housing the appliance.

Basic Safety & Warning Precautions

- Take care during operation, maintenance or repairs to avoid cuts or pinching from any part/component of the cabinet.
- Units may pose a tipping hazard while uncrating, during installation, or when moving the unit.
- Ensure the unit is properly installed and located in accordance with the Installation Instructions before use.
- This appliance is not to be used, cleaned or maintained by persons (including children) with reduced physical, sensory or mental capabilities or lack of experience and knowledge, unless they have been given supervision or instruction.
- **DO NOT** allow children to play with the appliance or climb, stand, or hang on the unit's shelves to prevent damage to the refrigerator and personal injury.
- **DO NOT** touch the cold surfaces in the freezer compartment when hands are damp or wet. Skin may stick to these extremely cold surfaces.
- Unplug the refrigerator before cleaning and making repairs.
- Setting temperature controls to the 0 position or powering off an electronic control may not remove power from all components (e.g., light circuits, perimeter heaters, and evaporator fans).
- **DO NOT** store or use gasoline, or other flammable vapors and liquids, in the vicinity of this or any other appliance.
- **DO NOT** store explosive substances such as aerosol cans with a flammable propellant in this appliance.
- Keep fingers out of the "pinch point" areas; clearances between the doors and cabinet are necessarily small; be careful closing doors when children are in the area.
- **DO NOT** use electrical appliances inside the food storage compartments of the units unless the appliances are of the type recommended by the manufacturer.

NOTE: All servicing must be performed by a qualified technician.

Cabinet Disposal Warning

DANGER!
RISK OF CHILD ENTRAPMENT

Proper Disposal of the Cabinet

Child entrapment and suffocation are not problems of the past. Junked or abandoned refrigerators are still dangerous, even if they will sit for "just a few days." If you are getting rid of your old refrigerator, please follow the instructions below to help prevent accidents.

Before throwing away your old refrigerator or freezer:

- Take off the doors.
- Leave the shelves in place so that children may not easily climb inside.

DANGER – Risk of fire or explosion. Flammable insulation and/or refrigerant used. Dispose of all in accordance with local and federal regulations. Follow all safety precautions.

Prior to Installation

Ownership

To ensure that your unit works properly from the first day, it must be installed properly. We highly recommend a trained refrigeration mechanic and electrician install your TRUE equipment. The cost of a professional installation is money well spent.

Before you start to install your TRUE unit, carefully inspect it for freight damage. If damage is discovered, immediately file a claim with the delivery freight carrier.

TRUE is not responsible for damage incurred during shipment.

Cabinet Location

- For proper operation, ambient temperatures shall not be less than 60°F (15.5°C) and no greater than 104°F (40°C).
- Appliance is not suitable for outdoor use.
- Appliance is not suitable for an area where a pressure washer or hose may be used.
- Ensure the location will provide adequate clearances and sufficient airflow for the cabinet.
- Ensure the power supply for the cabinet matches the cabinet specification sheet or cabinet data plate and is within the rated voltage (+/-5%). Also, that the amp rating of the circuit is correct and that it is properly grounded.
- The cabinet should always be plugged into its own individual dedicated electrical circuit. The use of adapter plugs and extension cords is prohibited.

Notice to Customer

Loss or spoilage of products in your refrigerator/freezer is **not covered by warranty**. In addition to following recommended installation procedures, you must run the refrigerator/freezer for 24 hours prior to usage to verify its proper operation.

CLEARANCES			
	TOP	SIDES	BACK
STR, STA, STG	12" Open (304.8 mm)	0"	1" (25.4 mm)
WARNING – Warranty is void if ventilation is insufficient.			

Wire Gauge Chart

115 Volts	Distance In Feet To Center of Load											
AMPS	20	30	40	50	60	70	80	90	100	120	140	160
2	14	14	14	14	14	14	14	14	14	14	14	14
3	14	14	14	14	14	14	14	14	14	14	14	12
4	14	14	14	14	14	14	14	14	14	12	12	12
5	14	14	14	14	14	14	14	12	12	12	10	10
6	14	14	14	14	14	14	12	12	12	10	10	10
7	14	14	14	14	14	12	12	12	10	10	10	8
8	14	14	14	14	12	12	12	10	10	10	8	8
9	14	14	14	12	12	12	10	10	10	8	8	8
10	14	14	14	12	12	10	10	10	10	8	8	8
12	14	14	12	12	10	10	10	8	8	8	8	6
14	14	14	12	10	10	10	8	8	8	6	6	6
16	14	12	12	10	10	8	8	8	8	6	6	6
18	14	12	10	10	8	8	8	8	8	8	8	5
20	14	12	10	10	8	8	8	6	6	6	5	5
25	12	10	10	8	8	6	6	6	6	5	4	4
30	12	10	8	8	6	6	6	6	5	4	4	3
35	10	10	8	6	6	6	5	5	4	4	3	2
40	10	8	8	6	6	5	5	4	4	3	2	2
45	10	8	6	6	6	5	4	4	3	3	2	1
50	10	8	6	6	5	4	4	3	3	2	1	1

230 Volts	Distance In Feet To Center of Load											
AMPS	20	30	40	50	60	70	80	90	100	120	140	160
5	14	14	14	14	14	14	14	14	14	14	14	14
6	14	14	14	14	14	14	14	14	14	14	14	12
7	14	14	14	14	14	14	14	14	14	14	12	12
8	14	14	14	14	14	14	14	14	14	12	12	12
9	14	14	14	14	14	14	14	14	12	12	12	10
10	14	14	14	14	14	14	14	12	12	12	10	10
12	14	14	14	14	14	14	12	12	12	10	10	10
14	14	14	14	14	14	12	12	12	10	10	10	8
16	14	14	14	14	12	12	12	10	10	10	8	8
18	14	14	14	12	12	12	10	10	10	8	8	8
20	14	14	14	12	10	10	10	10	10	8	8	8
25	14	14	12	12	10	10	10	10	8	8	6	6
30	14	12	12	10	10	10	8	8	8	6	6	6
35	14	12	10	10	10	8	8	8	8	6	6	5
40	14	12	10	10	8	8	8	6	6	6	5	5
50	12	10	10	8	6	6	6	6	6	5	4	4
60	12	10	8	6	6	6	6	6	5	4	4	3
70	10	10	8	6	6	6	5	5	4	4	2	2
80	10	8	8	6	6	5	5	4	4	3	2	2
90	10	8	6	6	5	5	4	4	3	3	1	1
100	10	8	6	6	5	4	4	3	3	2	1	1

Installation

Uncrating

Tools Required

- Adjustable wrench
- Phillips screwdriver
- Level

The following procedure is recommended for uncrating the unit:

1. Remove the outer packaging (cardboard and bubble wrap or Styrofoam corner and clear plastic). See fig. 1. Inspect for concealed damage. **Again, immediately file a claim with the freight carrier if there is damage.**
2. With an adjustable wrench, remove all shipping bolts securing the wood skid to the bottom of the cabinet. See fig. 2.

   NOTE: Move the unit as close as possible to the final location before removing the wooden skid. Some models may require removing the front and/or rear grill/cover to access the shipping bolts.
3. If leveling legs or castors **will not be used**, remove the cabinet from the wood skid and set the skid aside.

   NOTE: DO NOT lift the cabinet by the countertops, doors, drawers, or grills.

   If leveling legs or castors **will be used**, rotate the cabinet on the skid (see fig. 3) and see the installation instructions on page 6.

NOTE: Remember to leave cabinet upright for 24 hours before plugging into a power source. Keys for cabinet with door locks are located in the warranty packet.

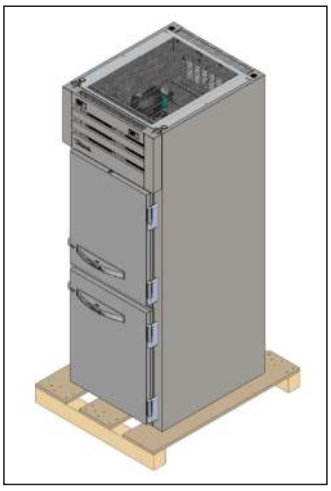

Fig. 1. Remove the exterior packaging.

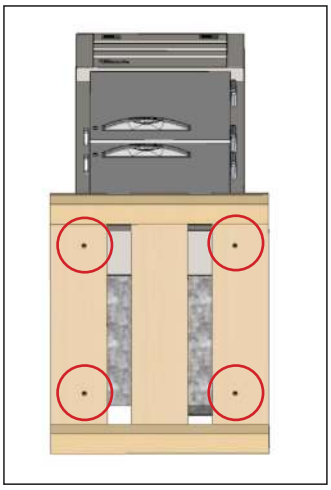

Fig. 2. Shipping bolt locations.

WARNING – Units may pose a tipping hazard while uncrating, during installation, or when moving the unit.

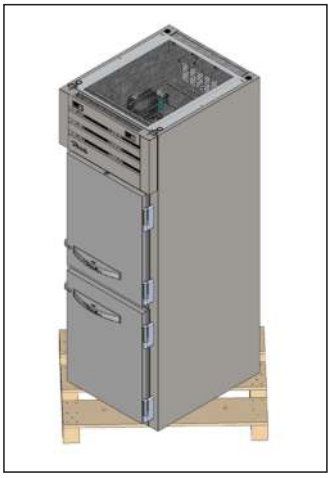

Fig. 3. When lifting unit, do not use countertops, doors/drawers, or grills as a lifting point.

Installation (cont.)

Cabinet Location

1. Ensure that the drain hose or hoses are positioned in the pan.
2. Free the plug and cord from inside the lower rear of the cooler (**DO NOT** plug in).
3. Place the unit close enough to the electrical supply so that the extension cords are never used.

Installing Leveling Legs

Leveling legs are provided to assist with leveling the cabinet.

With access to the bottom of the cabinet, thread the leveling legs into the holes used to secure the cabinet to the skid. See figs. 1 and 2.

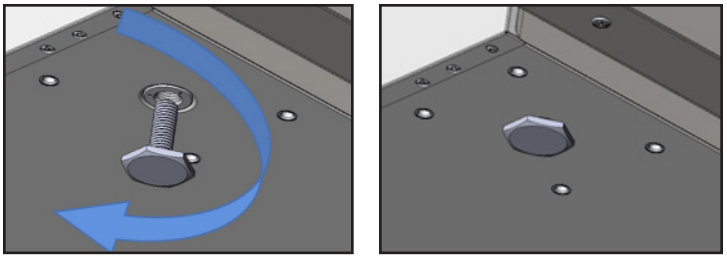

Fig. 1. Turn the leveling legs clockwise to lower the unit.

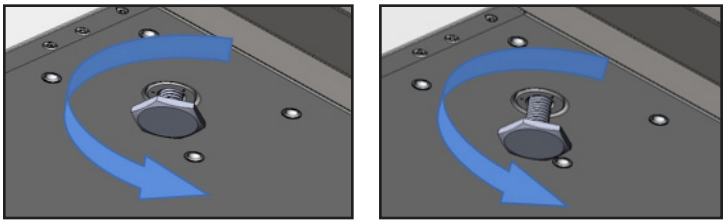

Fig. 2. Turn the leveling legs counterclockwise to raise the unit.

Fig. 3. Locate the threaded hole in the rail.

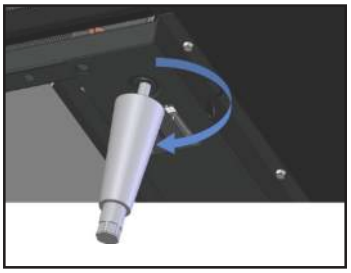

Fig. 4. Screw in the leveling legs.

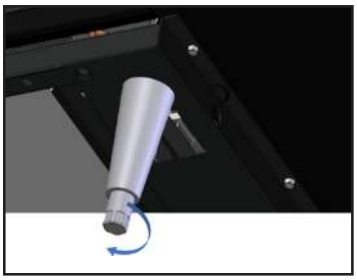

Fig. 5. Turn the bottom stem to level the cabinet.

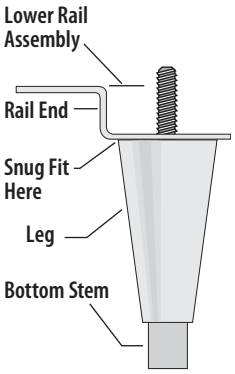

Installing 6" Leveling Legs or Castors

Adjustable legs will provide 6" (152 mm) of clearance under the cabinet. Castors provide cabinet mobility.

NOTE: If the cabinet has a center leveling screw, castor, or leg, make sure it is adjusted properly so it makes full contact with the floor after the cabinet has been leveled.

Required Tools

Adjustable Wrench

6" Leveling Legs

1. Access the bottom of the cabinet and thread the leveling legs into the rail. See figs. 3 and 4.
2. Verify that the cabinet is level.
3. If the cabinet is not level, gently lift and support the low end of the cabinet. With an adjustable wrench, screw the bottom stem of the leveling leg in or out to level and support the cabinet. See fig. 5.

Castors

1. Locate the castor anchor points on the underside of the cabinet.
2. With an adjustable wrench and the provided hardware, install the plate castors.

   NOTE: DO NOT overtighten the bolts.
3. Verify the level of the cabinet. If the cabinet is not level, gently lift and support the low end of the cabinet and add castor shims.
   - **a.** Loosen the castor bolts to create space between the mounting plate and the bottom of the cabinet. See fig. 6a.
   - **b.** Position the castor shims and tighten the castor bolts. See figs. 6b and 6c.
   - **c.** Lower the cabinet and verify it is level. Repeat the process until the cabinet is level.

   NOTE: Install shims in pairs and ensure the shims contact the castor mounting bolts.

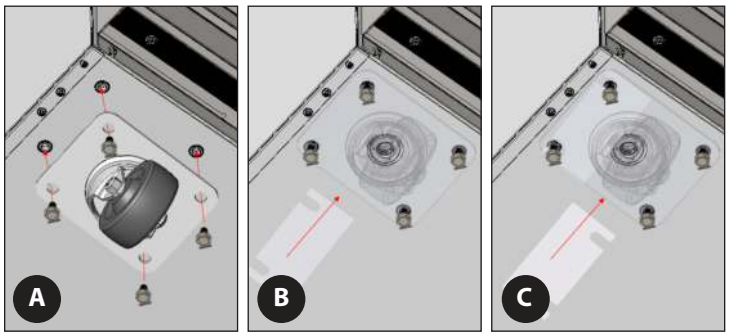

Fig. 6. Install castor shims in pairs.

Installation (cont.)

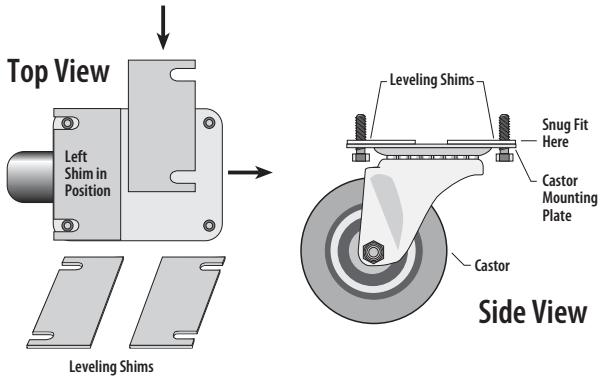

Leveling

Proper leveling of your TRUE cooler is critical to operating success (for non-mobile models). Leveling impacts effective condensate removal and door operation.

Level the unit front-to-back and side-to-side.

1. Position the level on the inside floor of the unit near the doors (the level should be parallel to cabinet front). Level the cabinet.
2. Position the level at the inside rear of cabinet (again, the level should be placed parallel to cabinet back). Level the cabinet.
3. Perform procedures similar to steps 1 and 2 by placing the level on inside floor (left and right side, parallel to the depth of the cooler). Level the cabinet.

NOTE: If the cabinet has a center leveling screw, castor, or leg, make sure it is adjusted properly so it makes full contact with the floor after the cabinet has been leveled.

Sealing the Cabinet to the Floor

Asphalt floors are susceptible to chemical attack. A layer of tape may be placed on the floor prior to applying the sealant to protect the floor.

1. Position the cabinet, allowing 3" (73 mm) between the wall and the rear of the cabinet to ensure proper ventilation.
2. Level the cabinet. The cabinet should be level side-to-side and front-to-back. To check that the cabinet is level, place a carpenter's level on the interior cabinet floor in four places:
   - **a.** Position the level on the inside floor of the cabinet, near the doors (the level should be placed parallel to the cabinet front). Level the cabinet.
   - **b.** Position the level at the inside rear of the cabinet (the level should be placed parallel to the cabinet back). Level the cabinet.
   - **c.** Perform procedures similar to a. and b. by placing the level on the left and right inside floor (level should be parallel to the cabinet sides). Level the cabinet.
3. Draw an outline of the cooler base on the floor.
4. Raise and block the front side of the cabinet.
5. Apply a bead of NSF-approved sealant (see list below) to the floor, 1/2" (13 mm) inside the front part of the outline drawn in step 4. The bead of sealant must be heavy enough to seal the entire cabinet surface when the cabinet is lowered on top of the sealant.
6. Raise and block the rear of the cabinet.
7. Apply sealant to the floor on the other three sides, as outlined in step 5.
8. Examine the the cabinet to ensure that it is sealed to the floor around the entire perimeter.

NSF-Approved Sealants

- 3M #ECU800 Caulk
- 3M #ECU2185 Caulk
- 3M #ECU1055 Bead
- 3M #ECU1202 Bead
- Armstrong Cork – Rubber Caulk
- Products Research Co. #5000 Rubber Caulk
- G.E. Silicone Sealer
- Dow Corning Silicone Sealer

Installation (cont.)

Electrical Installation & Safety

Use of Adapter Plugs

NEVER USE AN ADAPTER PLUG! An adapter plug alters the original OEM plug configuration when connecting it to a power source.

TRUE will not warranty any refrigerator/freezer that has been connected to an adapter plug.

Use of Extension Cords

NEVER USE AN EXTENSION CORD! An extension cord is determined to be any component that adds length to the original OEM power cord when connecting it to a power source.

TRUE will not warranty any refrigerator/freezer that has been connected to an extension cord.

NEMA Plug Configurations

60 HZ USE ONLY!

TRUE uses these types of NEMA plugs shown. If you **DO NOT** have the proper outlet, have a licensed electrician verify and install the correct power source.

115/60/1
NEMA-5-15R

115/208-230/1
NEMA-14-20R

115/60/1
NEMA-5-20R

208-230/60/1
NEMA-6-15R

International (IEC) Plugs Only

International cabinets may be supplied with a power cord that will require installation. Install this cord before connecting the unit to a power source.

NOTE: International plug configurations will vary by country and voltage

Installation

Fully seat the power cord into the cabinet receptacle until it locks in position. See fig. 1.

Removal

Depress the red button. See fig. 2.

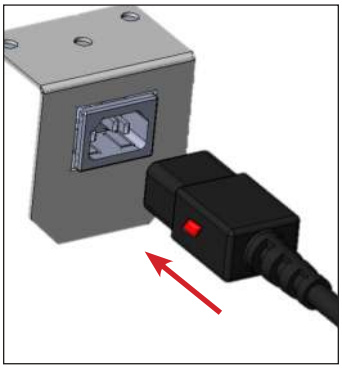

Fig. 1. Fully insert the power cord into the receptacle.

Fig. 2. Push the red button to remove the plug.

How to Connect Electricity

- The power cord from this appliance is equipped with a grounding plug which minimizes the possibility of electric shock hazard.
- The wall outlet and circuit should be checked by a licensed electrician to make sure the outlet is properly grounded.
- If the outlet is a standard 2-prong outlet, it is your personal responsibility and obligation to have it replaced with the properly grounded wall outlet.
- **DO NOT**, under any circumstances, cut or remove the ground prong from the power cord. For personal safety, this appliance must be properly grounded.
- Before your new unit is connected to a power supply, check the incoming voltage with a voltmeter. If the recorded voltage is less than the rated voltage for operation (+/-5%) and amp rating, correct immediately. Refer to cabinet data plate for this voltage requirement.
- The refrigerator/freezer should always be plugged into a dedicated electrical circuit. This provides the best performance and prevents building wiring circuits from being overloaded, which could cause a fire hazard from overheated wires.
- Never unplug your refrigerator/freezer by pulling on the power cord. Always grip plug firmly and pull straight out from the outlet.
- When moving the refrigerator/freezer, for any reason, be careful not to roll over or damage the power cord.
- Repair or replace immediately all power cords that have become frayed or otherwise damaged. **DO NOT** use a power cord that shows cracks or abrasion damage along its length or at either end.
- If the supply power cord is damaged, it should be replaced with original equipment manufacturer (OEM) components. To avoid hazard this should be done by a licensed service provider.

Cabinet Wiring Diagram

The cabinet's wiring diagram is in the exterior servicing compartment space of the cabinet.

A copy of the wiring diagram may also be obtained at **www. truemfg.com/support/serial-number-lookup**

Cabinet Setup

Shelf Installation

True STR/STA/STG cabinets have four shelving/tray options.
Kit #1 -- Angle Tray Slides
Kit #2 -- Rod Tray Slides
Kit #3 -- Universal Tray Slides
Kit #4 -- Shelf Standards (shelf clips)

Kit #1 -- Angle Tray Slides

Kit #2 -- Rod Tray Slides

Kit #3 -- Universal Tray Slides

Kit #4 -- Shelf Standards (shelf clips)

Shelf/Tray Configurations

Each shelf/tray kit has two options: A full kit and a half kit. Full kits have pilasters as tall as the cabinet interior. Half kits have pilasters half the height of the cabinet interior. This makes shelving and tray configurations adjustable to best suit the customer application. Please see examples of configurations below.

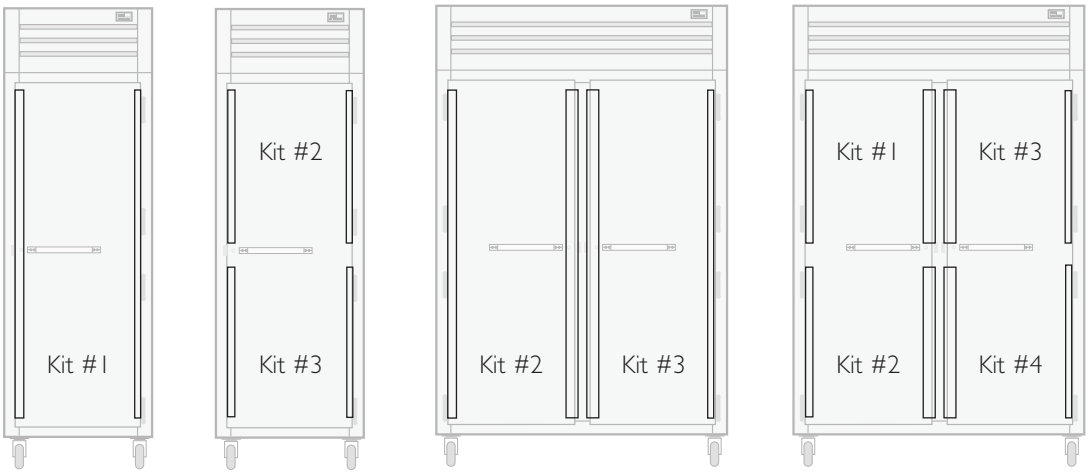

Cabinet Setup (cont.)

Angle/Rod/Universal Tray Installation (Kits #1, # 2 & #3)

Required Tools

- Flat Blade Screwdriver
- Rubber/Plastic Mallet
- Tape Measure

Installation

1. Thread the provided hardware into the holes on the cabinet sidewall.
2. Slide the pilasters into position behind the threaded screws. See figs. 1-3.

   NOTE: Leave the screws loose for adjustment when installing the tray slides.
3. Verify the distance between the center holes of front and back pilaster pairs is 24-5/8" (625mm). See fig. 4.
4. Verify the width between the pilasters. See figs. 5 and 6.
   - ANGLE & ROD TRAYS: 18-1/8" (460 mm)
   - UNIVERSAL TRAYS: 21-1/4" (540 mm)
5. Hook the tray slides into the pilasters. See figs. 7a-7c.

   NOTE: When disassembling or changing tray slides, a rubber mallet may be used to remove the

   tray slides. Gently tap on the underside of the slide to loosen it.
6. Tighten the pilaster screws.

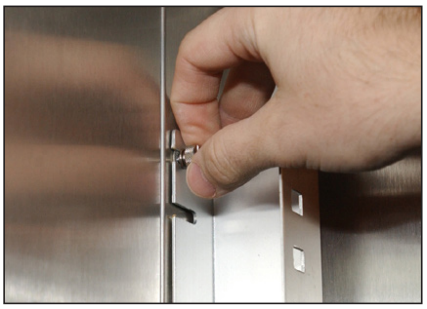

Fig. 1. Pilaster installation on cabinet sidewall.

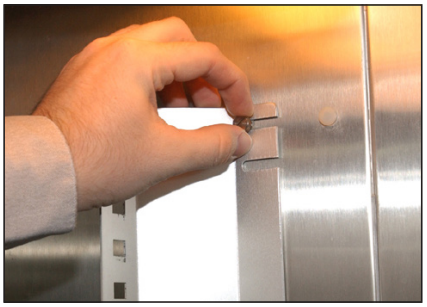

Fig. 2. Angle/rod tray pilaster installation; center of cabinet rear.

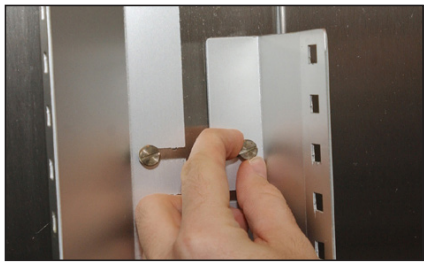

Fig. 3. Universal tray pilaster installation; center of cabinet rear.

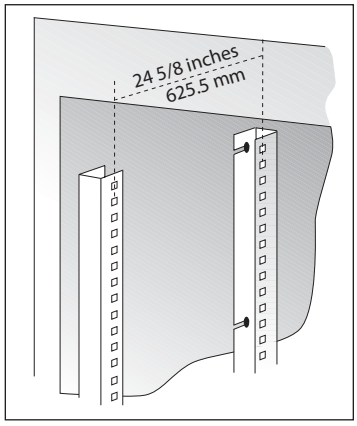

Fig. 4. Measure between center holes of each pair of front and back pilasters.

Cabinet Setup (cont.)

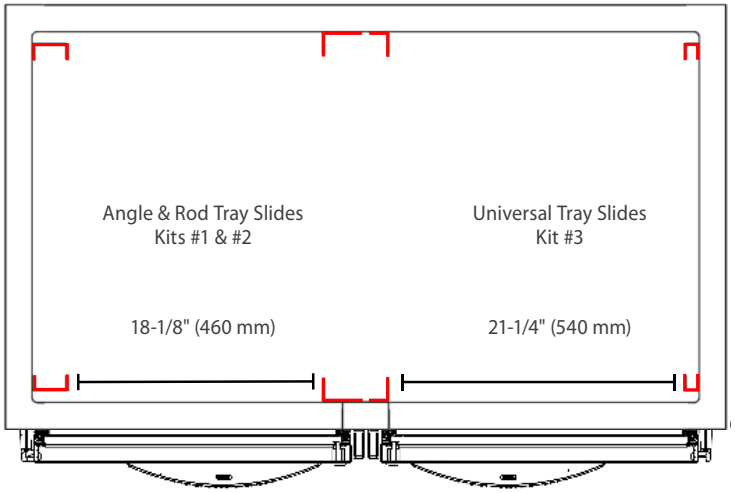

Fig. 5. Measure the distance between pilasters. Top-down view.

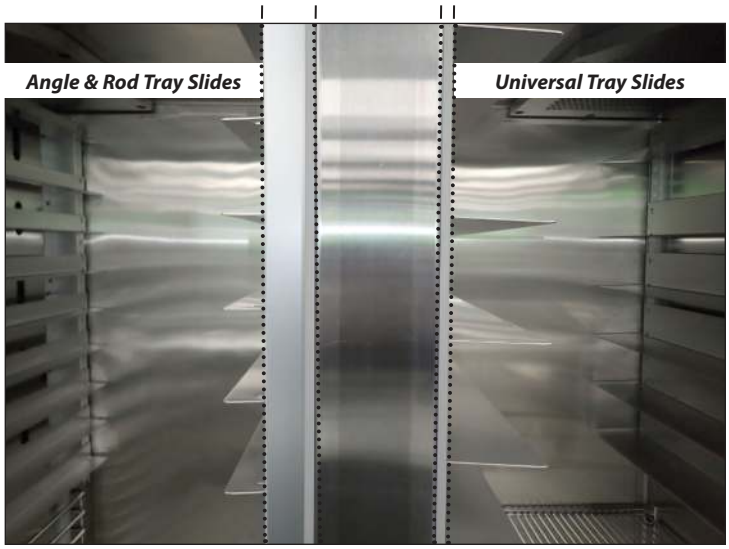

Fig. 6. The shelving kits have different pilaster sizes.

Cabinet Setup (cont.)

Fig. 7a. Installing kit #1 angle tray sides.

Fig. 7b. Installing kit #2 rod tray sides.

Fig. 7c. Installing kit #3 universal tray sides.

Cabinet Setup (cont.)

Shelf Standard Installation (Kit #4)

1. With the provided hardware, secure the shelf standards to the cabinet side walls. Hook the shelf clips into the shelf standards. See fig. 1.
2. Push up on the bottom of the clip. See fig. 2.

   NOTE: You may need to squeeze or twist the bottom of the shelf clip for proper installation. Position all four shelf clips equal in distance from the floor for flat shelves.
3. Ensure the shelf clip is not loose or able to wiggle out of the shelf standard. See figs. 3 and 4.
4. Place the shelves on the shelf clips with the cross support bars facing down.

   NOTE: Be sure all shelf corners are properly seated.

Installation Tips

- Install **all** the shelf clips before installing any shelves.
- Start at the bottom shelf and work your way up.
- Always lay the back of each shelf down on the rear clips before the front.

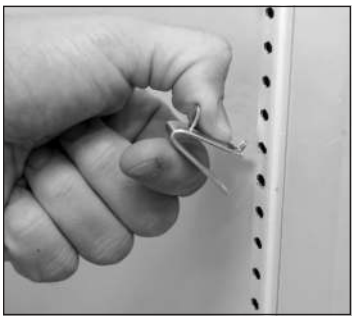

Fig. 1. Installing top tab of shelf clip.

Fig. 2. The bottom tab of the shelf clip will fit tightly

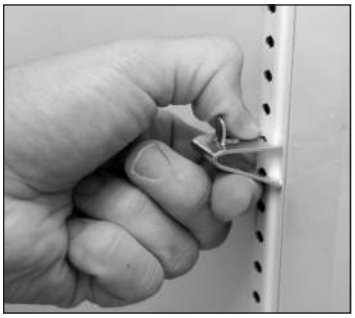

Fig. 3. You may need to squeeze or twist the bottom of the shelf clip to install.

Fig. 4. Installed shelf clip.

WARNING – **DO NOT** use pliers or any crimping tools when installing shelf clips. Altering shelf clips in any way can lead to shelving instability.

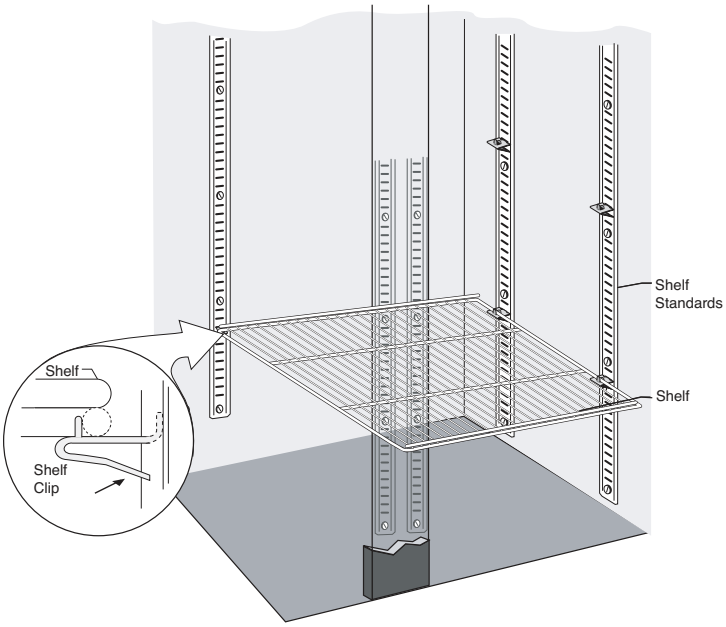

Cabinet Setup (cont.)

Heated Drain Pan Installation (Previous Design)

STR/STA/STG1D

Required Tools

- 1/4" Hex Head Driver.
- Socket Set
- 3/4" Socket
- Drill

Before you begin

Uncrate the cabinet as described on page 5. Install castors (see "Installing 6" Leveling Legs or Castors" page 6) and level the cabinet (see "Leveling" page 7).

1. Locate the heated drain pan (HDP) and the associated bracket and hardware. See figs. 1 and 2.
2. With the provided hardware, install the HDP bracket on the underside of the cabinet. See fig.
3. Position the HDP in the bracket. See fig. 4.
4. Connect the barbed 90° fittings and copper fittings to the provided hoses. Then position the hose ends with the copper fittings in the drain pan and connect the barbed fittings to the hoses on the back of the cabinet. See figs. 5 and 6.
5. Connect the HDP power cord to the female connector on the back of the cabinet. See fig. 7.

Fig. 1. Locate the box with the heated drain pan (HDP) and its components.

Fig. 2. HDP and HDP bracket.

Fig. 3. Secure the HDP bracket to the underside of the cabinet.

Fig. 4. Place the HDP in the HDP bracket.

Fig. 5. Connect the provided fittings to the provided hoses.

Fig. 6. Connect the barbed fitting to the hoses on the cabinet.

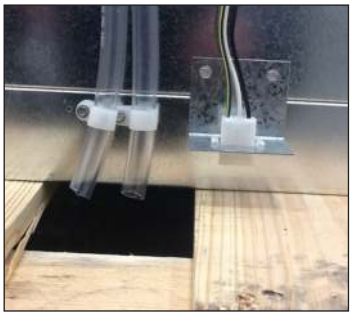

Fig. 7. Electrical connection for the HDP.

Cabinet Setup (cont.)

Heated Drain Pan Installation (Current Design)

STR/STA/STG1D

Required Tools

- 1/4" Hex Head Driver.
- Socket Set
- 3/4" Socket
- Drill

Before you begin

Uncrate the cabinet as described on page 5. Install castors (see "Installing 6" Leveling Legs or Castors" page 6) and level the cabinet (see "Leveling" page 7).

1. Locate the heated drain pan (HDP) and the associated bracket and hardware. See figs. 1 and 2.
2. On the underside of the cabinet, locate the two drain elbows. See fig. 3.
3. Connect the provided drain hose extensions to the drain elbows. See fig. 4.
4. Install the HDP bracket on the underside of the cabinet. See fig. 5.
5. Position the HDP in the HDP bracket. Then, route the drain hose extensions through the bracket and into the HDP. See fig. 5.
6. Connect the HDP power cord to the receptacle located behind the outer back cover. See fig. 6.

Fig. 1. Locate the box with the heated drain pan (HDP) and its components.

Fig. 2. HDP and HDP bracket.

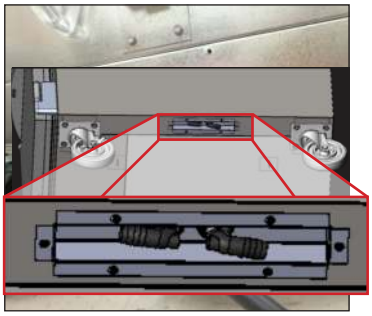

Fig. 3. Drain elbow location underneath the cabinet.

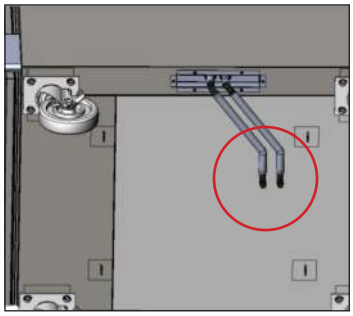

Fig. 4. Hoses connected to the drain elbows.

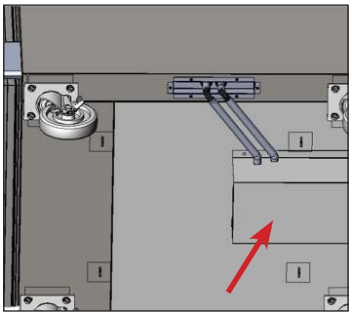

Fig. 5. Heated drain pan bracket positioned and hoses routed.

Fig.6.

Cabinet Operation

Startup

- The compressor is ready to operate when the unit is purchased. All you need to do is plug in the cooler.
- Excessive tampering with the control could lead to service difficulties. If replacing the temperature control is ever needed, be sure to order the replacement from your TRUE dealer or recommended service agent.
- Good air flow inside your TRUE unit is critical. Take care to prevent product from pressing against the sides or back wall and coming within 4" (101.6 mm) of the evaporator housing. Refrigerated air off the evaporator coil must circulate throughout the cabinet for even product temperatures.

NOTE: If the unit is disconnected or shut off, wait 5 minutes before restarting.

RECOMMENDATION – Before loading product, run your TRUE unit empty for 24 hours to verify proper operation. Remember, our factory warranty **DOES NOT** cover product loss!

Temperature Control & Light Switch Location

The light symbol shows the approximate location of the light switch.

The electronic temperature control can act as a light switch. To control the light, press the up arrow M.

Electronic Temperature Control
On the front of grill.

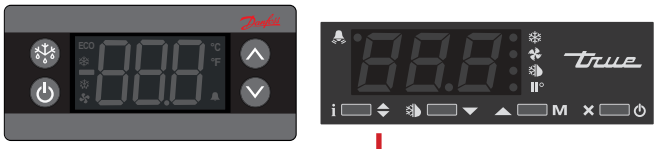

Light Switch
Behind the front louver grill

FOR MORE INFORMATION

For more information regarding a cabinet's temperature control adjustment or general sequence of operation, please see our **Temperature Control Adjustment—Sequence of Operation Manual** in our resource library at **https://www.truemfg.com/Service-Manuals/Sequence-of-Operation** or follow the QR code.

Cabinet Operation (cont.)

General Sequence of Operation—Refrigerator and Freezer Cabinets

When the cabinet is plugged in...

- Interior lights will illuminate on glass door models (see previous page for light switch location).
- An electronic control with digital display will illuminate (if installed).
- There may be a short delay before the compressor and/or evaporator fan(s) start. This delay may be determined by time or by temperature, which could be the result of an initial defrost event that will last at least 6 minutes.
- The temperature control/thermostat may cycle the compressor and evaporator fan(s) on and off together. Every cabinet will require a defrost event to ensure the evaporator coil remains clear of frost and ice buildup. Defrost is initiated by a defrost timer or by the electronic control.

  EXCEPTION – Models TSID, TDBD, TCGG, and TMW do not have an evaporator fan(s).
- The temperature control/thermostat senses either an evaporator coil temperature or air temperature, NOT product temperature.
- An analog thermometer, digital thermometer, or electronic control display may reflect the refrigeration cycle swings of up and down temperatures, NOT product temperature. **The most accurate method to determine a cabinet's operation is to verify the product temperature.**
- Refrigerators with mechanical temperature controls will defrost during every compressor off-cycle.
- Freezers with mechanical temperature controls will defrost by time initiation as determined by a defrost timer.

  EXCEPTION – Models TFM, TDC, THDC and TMW require a manual defrost. The frequency of this manual defrost will depend on the cabinet's usage and ambient conditions.
- An electronic control with a digital display (if installed) will show **def** during defrost.

  NOTE: The display may have a short delay before showing a temperature after a defrost event has expired and instead show **def** during a refrigeration cycle.
- Models with an analog or digital thermometer may show higher than normal temperatures during defrost.
- A refrigerator will use the evaporator fans to clear the coil during defrost.

  EXCEPTION – Models TSID, TDBD, and TCGG do not have an evaporator fan(s).
- A freezer will use heaters to clear the evaporator coil during defrost.

  NOTE: The evaporator coil heater and drain tube heater are only energized during defrost. Defrost is terminated when a specific evaporator coil temperature is reached or by a time duration.

Maintenance, Care & Cleaning

CAUTION - Take care during operation, maintenance or repairs to avoid cuts or pinching from any cabinet part/component.

Condenser Coil Cleaning

When using electrical appliances, basic safety precautions should be followed, including the following:

WARNING – Electrical shock or burn hazard. Unplug the unit or turn off the power supply before proceeding. **DO NOT** clean appliance with a pressure washer or hose.

CAUTION – Risk of eye injury. Eye protection is recommended.

CAUTION – Coil fins are sharp. Gloves are recommended.

Tools Required

- Stiff bristle brush
- Tank of compressed air
- Vacuum cleaner
- Flashlight
- Eye protection
- Gloves

1. Disconnect power to the unit.
2. Locate the thumbscrews from the top of the cabinet. See fig. 1.
3. Remove the thumbscrews. Then, lift the rainshield open and thread the thumbscrews into their original locations. See fig. 2.
4. With a stiff bristle brush, carefully clean accumulated dirt from the front condenser coil fins See fig. 3.
5. With dirt removed from the surface of the coil, use a flashlight to verify that you can see through the coil and observe the condenser fan blade spinning.

   NOTE: If the view is still blocked with dirt, gently blow compressed air or CO_2 through the coil until it is clean.
6. Carefully vacuum any dirt around and behind the condensing unit area.
7. Close the rainshield. Be sure to thread the thumbscrews into their original locations.

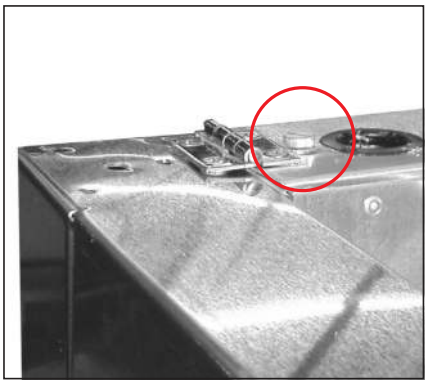

Fig. 1. Thumbscrew location.

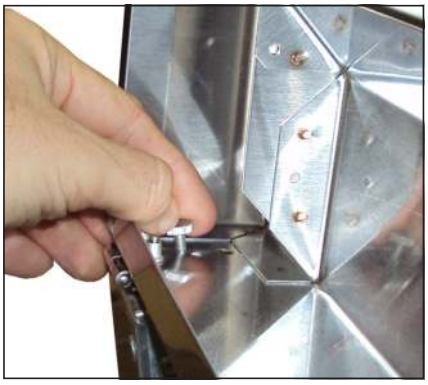

Fig. 2. Hold the rainshield open with the thumbscrews.

Fig. 3. Never brush across coil fins.

Maintenance, Care & Cleaning (cont.)

Important Warranty Information
THE CLEANING OF THE CONDENSER IS NOT COVERED BY WARRANTY!

If you have any questions, please contact your local TRUE Manufacturing Service Department. See the front cover for locations and contact information.

- Condenser coils accumulate dirt and require cleaning every 30 days or as needed.
- A dirty condenser coil can result in non-warranteed repairs and/or cabinet failure.
- Proper cleaning involves removing dust from the condenser by using a soft brush, vacuuming the condenser with a shop vac, or using CO_2, nitrogen or pressurized air.
- Do not place any filter material in front of the condensing coil.
- On most units, the condenser is accessible by removing the cabinet's outer grill cover.
- If you cannot remove the dirt adequately, please contact your licensed refrigeration service provider.

Maintenance, Care & Cleaning (cont.)

Stainless Steel Care & Cleaning

CAUTION – **DO NOT** use any steel wool, abrasive or chlorine-based products to clean stainless steel surfaces.

Stainless Steel Opponents

There are three basic things which can break down your stainless steel's passivity layer and allow corrosion to form.

- Scratches from wire brushes, scrapers, steel pads, and other items that can be abrasive to stainless steel's surface.
- Deposits left on your stainless steel can leave spots. You may have hard or soft water depending on what part of the country you live in. Hard water can leave spots. Hard water that is heated can leave deposits if left to sit too long. These deposits can cause the passive layer to break down and rust your stainless steel. All deposits left from food prep or service should be removed as soon as possible.
- Chlorides which are present in table salt, food and water, as well as in household and industrial cleaners. These are the worst type of chlorides to use on stainless steel.

Stainless Steel Cleaning and Restoration

DO NOT use stainless steel cleaners or similar solvents to clean plastic or powder-coated parts. Instead, use warm soapy water.

- For routine cleaning and removal of grease and oil, apply white vinegar, ammonia, or any good commercial detergent* with a soft cloth or sponge.
- Stainless steel polish (e.g., Zep® Stainless Steel Polish, Weiman® Stainless Steel Cleaner & Polish, Nyco® Stainless Steel Cleaner & Polish, or Ecolab® Ecoshine®) and olive oil can act as a barrier against fingerprints and smears.
- Degreasers* (e.g., Easy-Off® Specialty Kitchen Degreaser or Simple Green® Industrial Cleaner & Degreaser) are excellent for removal of grease, fatty acids, blood and burnt-on foods on all surfaces.

*__DO NOT__ use detergents or degreasers with chlorides or phosphates.

- For restoration/passivation or removing stubborn stains and discoloration, Brillo® Cameo®, Zud® Cleanser, Ecolab® Specifax™ First Impression® Metal Polish, Sheila Shine, or talc can be applied by rubbing in the direction of the polish lines.

NOTE: The use of proprietary names is intended for example only and does not constitute or imply an endorsement. Omission of proprietary cleansers from this list does not imply inadequacy.

8 Tips to Help Prevent Rust on Stainless Steel

Maintain the Cleanliness of Your Equipment

Avoid build-up of hard stains by cleaning frequently. Use cleaners at the recommended strength (alkaline chlorinated or non-chloride).

Use the Correct Cleaning Tools

Use non-abrasive tools when cleaning your stainless steel products. The stainless steel's passive layer will not be harmed by soft cloths and plastic scouring pads.

Clean Along Polishing Lines

Polishing lines ("grain") are visible on some stainless steels. Always scrub parallel to polishing lines when visible. Use a plastic scouring pad or soft cloth when you cannot see the grain.

Use Alkaline, Alkaline-Chlorinated or Non-Chloride Cleaners

While many traditional cleaners are loaded with chlorides, the industry is providing an ever increasing choice of non-chloride cleaners. If you are not sure of your cleaner's chloride content, contact your cleaner supplier. If they tell you that your present cleaner contains chlorides, ask if they have an alternative. Avoid cleaners containing quaternary salts, as they can attack stainless steel, causing pitting and rusting.

Rinse

When using chlorinated cleaners, you must rinse and wipe dry immediately. It is better to wipe standing cleaning agents and water as soon as possible. Allow the stainless steel equipment to air dry. Oxygen helps maintain the passivity film on stainless steel.

Never Use Hydrochloric Acid (Muriatic Acid) on Stainless Steel

Even diluted, hydrochloric acid can cause corrosion, pitting and stress corrosion cracking of stainless steel.

Water Treatment

To reduce deposits, soften hard water when possible. Installation of certain filters can remove corrosive and distasteful elements. Salts in a properly maintained water softener can also be to your advantage. Contact a treatment specialist if you are not sure of the proper water treatment.

Regularly Restore & Passivate Stainless Steel

Stainless steel gets its stainless properties from the protective chromium oxides on its surface. If these oxides are removed by scouring, or by reaction with harmful chemicals, then the iron in the steel is exposed and can begin to oxidize, or rust. Passivation is a chemical process that removes free iron and other contaminants from the surface of stainless steel, allowing the protective chromium oxides to re-form.

Cabinet Adjustments, Servicing & Component Replacement

NOTE: Any cabinet adjustments are to be made **AFTER** the cabinet has been verified level and properly supported.

Servicing & Replacing Components

- Replace component parts with original equipment manufacturer (OEM) components.
- Have a licensed service provider service your unit to minimize the risk of possible ignition due to incorrect parts or improper service and to ensure the operator's health and safety.
- Unplug the refrigerator/freezer before cleaning or making any repairs. Setting temperature controls to the 0 position or powering off an electronic control may not remove power from all components (e.g., light circuits, perimeter heaters, and evaporator fans).

Cabinet Adjustments & Servicing (cont.)

Door Adjustment

If the doors need to be aligned, adjust the hinges on the cabinet and door as described below. After adjusting the hinges, be sure to adjust the lock latch as needed.

Required Tool

- Phillips Screwdriver.

Before you begin

1. Remove the door.
2. Open the door 90° from the cabinet. Then, lift the from the hinges.

   NOTE: Take care to avoid the rainshield.

Adjust the Cabinet Hinge

1. Remove the gray plastic cover from the hinge. See fig. 1.
2. With a Phillips screwdriver, loosen the hinge screws. See fig. 2.

   NOTE: DO NOT remove the hinge.
3. Adjust the cabinet hinge up/down/sideways accordingly. See fig. 2.
4. Tighten the hinge screws.

   NOTE: DO NOT overtighten.

Adjust the Door Hinge

1. Remove the hinge cover. See fig. 3.
2. With a Phillips screwdriver, loosen the hinge screws. See fig. 4.

   NOTE: DO NOT remove the hinge.
3. Adjust the door hinge up/down/sideways accordingly. See fig. 4.
4. Tighten the hinge screws.

   NOTE: DO NOT overtighten.

Adjust the Lock Latch

1. With a Phillips screwdriver, remove the latch. See fig. 5.
2. Loosen the lock base. See fig. 6.

   NOTE: DO NOT remove the lock base.
3. Adjust the lock base up/down/sideways accordingly. See fig. 6.
4. Tighten the lock base.

   NOTE: DO NOT overtighten.
5. Install the latch.

Fig. 1. Pry the gray cover from the hinge.

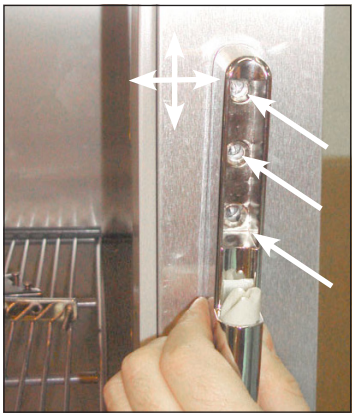

Fig. 2. Cabinet hinge screw locations. Move the hinge as needed.

Fig. 3. Pull the hinge cover from the door hinge.

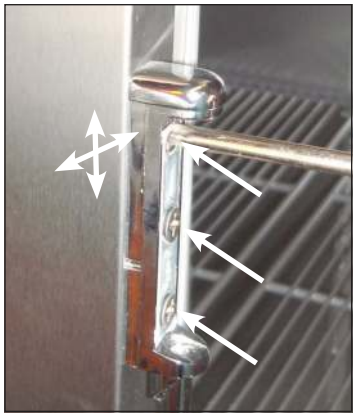

Fig. 4. Door hinge screw locations. Move the hinge as needed.

Fig. 5. Latch screw locations.

Fig. 6. Lock base screw locations. Move the base as needed.

FOR MORE INFORMATION

For additional maintenance instruction, please visit the media center at

www.truemfg.com

Warranty Information (USA & Canada Only)

Warranty Information

To view and download the Warranty Statements for USA and Canada, please scan the QR code below.

www.truemfg.com

EA & BP _975552_03.2021