GDM-26-HC~TSL01

GDM-49-HC~TSL01

GDM-69-HC-LD

⚠ WARNING!

Be sure to read and fully understand this document before installing, operating, maintaining or servicing this appliance. Failure to do so can result in appliance failure, property damage, serious injury or death. Appliance failure, injury or property damage due to improper installation is not covered by warranty.

USER ACTION!

TRUE tracks the history of your appliance by its serial number. For easy reference, record your appliances full model name and serial number below. This information is on your serial label. Serial label location varies by appliance.

Model Name:

Serial Number:

True Manufacturing Co., Inc.

2001 East Terra Lane • O'Fallon, Missouri 63366-4434
(636) 240-2400 • FAX: (636)-272-2408

International FAX: (636)-272-7546 • (800)-325-6152

Parts Department: (800)-424-TRUE (424-8783)
Parts Department FAX: (636)-272-9471

INSTALLATION MANUAL
GDM Freezer / Refrigerator
Original Instructions

North America – Canada and Caribbean
Warranty Phone +1 855-878-9277
Warranty Fax +1 636-980-8510
Warranty Email warrantyinquiries@truemfg.com
Technical Phone +1 855-372-1368
Technical Email service@truemfg.com
7:00 am–6:00 pm CST Monday–Friday,
8:00 am–12:00 pm Saturday

Mexico
Phone +52 555-804-6343/44
service-mexicocity@truemfg.com
9:00 am–5:30 pm M–F

Latin America
Phone: +52 555-804-6343/44
servicelatam@truemfg.com
9:00 am–5:30 pm M–F

UK, Ireland, Middle East, Africa & India
Phone: +44 (0) 800-783-2049
Service-emea@truemfg.com
8:30 am–5:00 pm M–F

Australia
Phone: +61 2-9618-9999
service-aus@truemfg.com
8:30 am–5:00 pm M–F

European Union & Commonwealth of Independent States
Phone: +49 (0) 7622-6883-0
service-emea@truemfg.com
8:00 am–5:00 pm M–F

975536-D

TEC_TM_105 | REV. D | EN

05/16/2023

THANK YOU

FOR YOUR PURCHASE

Congratulations!

The primary purpose of this document is to assist the installation, maintenance, and servicing of your TRUE appliance. This document contains information important to safety, operation, maintenance, and servicing. **DO NOT** discard this document. TRUE is solely the appliance manufacturer. For assistance finding a qualified technician, please visit our Service Company Locator at **truemfg.com/support/service-company-locator**.

NOTICE!

Your appliance may not exactly match the figures shown in this manual.

Contents

Preface
Signal & Symbol Definitions 3

Important Safety Information
Basic Safety & Operation Warnings 4
Personal Injury Warnings 5
Hydrocarbon Refrigerant Warnings 6
Appliance Disposal Warnings 6
Electrical Safety Warnings 7

About Your Appliance & Installation Requirements
Appliance Specifications 8
Clearances 9
Electrical Requirements 10
Electrical Installation & Safety 10
Wiring Instruction Advisement (115V only) 11

Installation & Setup
Uncrating 12
Appliance Location 15
Leveling Screw, Leg or Castor Installation 15
Castor Installation (GDM-10/12) 17
Level the Appliance 17
Seal the Appliance to the Floor 18
Shelf Installation 19
G4SM-23RGS Shelf Bracket Assembly 20
Installing Shelves (GDM-30 Only) 20

Appliance Operation
Startup 21
Temperature Control & Light Switch Location 22
True FlexTemp 22
General Sequence of Operation 23

Maintenance & Servicing
Component Replacement 25
Recommended Maintenance 26
Condenser Coil Cleaning 28
General Surface Care & Cleaning 30
Stainless Steel Care & Cleaning 31
8 Tips to Help Prevent Rust on Stainless Steel 32
Slide Door Removal 33
Slide Door Adjustment 35
Slide Door Hold-Open Feature 35

Warranty
Warranty Information 36

Preface

The warning, guidelines, and recommendations within this document are meant to prevent appliance damage, injury, or death. Please carefully read all warnings, guidelines, and recommendations before proceeding to ensure the continued safe use and maintenance of your TRUE appliance.

Signal & Symbol Definitions

Below are symbols you may see in this document. Some symbols may not appear.

Signal Word Definitions	
⚠ DANGER!	An imminently hazardous situation which, if not avoided, will result in serious injury or death.
⚠ WARNING!	A potentially hazardous situation which, if not avoided, can result in serious injury or death.
⚠ CAUTION!	A potentially hazardous situation which, if not avoided, may result in minor or moderate injury; an unsafe practice.
! USER ACTION!	User action alert, follow all recommendations to avoid appliance or product damage.
! NOTICE!	Important information not related to hazards or risk of personal injury.

Safety Symbols	
	Safety alert; alerts reader to potential physical injury hazards. Obey all safety messages following this symbol to avoid possible injury or death.
	Flammable material; fire hazard.
	Electrical shock hazard.
	Tipping hazard; tip-over hazard.
	Sharp element; cut or sever hazard.
	Eye hazard; risk of eye injury.
	Exploding pressurized cylinder hazard.
	Slippery surface hazard.
	Crush or cut hazard.

Additional Symbols	
	Mandatory action alert symbol; alerts reader to required or recommended actions. Obey all messages and recommendations following this symbol to avoid appliance or product damage.
NOTICE ›	**Important information** not related to hazards or risk of personal injury.
	Review and understand the installation manual before installing, operating, or servicing.
	Wear **eye protection**.
	Wear **protective gloves**.
	Secure gas cylinders to prevent falling cylinders.
	DO NOT use extension cord.
	DO NOT use adaptor plugs.
	DO NOT dispose of with other household waste.

Important Safety Information

Basic Safety & Operation Warnings

Follow basic safety precautions, including the following, to reduce risk of personal injury, electric shock, fire, or death.

⚠ WARNING!

Be sure to read and fully understand this document before installing, operating, maintaining, or servicing this appliance. Failure to do so can result in appliance failure, property damage, serious injury, or death. Appliance failure, personal injury, or property damage due to improper installation is not covered by warranty.

- Failure to install, operate, and maintain the appliance as detailed in this document will negatively affect safety, appliance performance, component life, and warranty coverage.
- The appliance must be installed in accordance with all applicable laws, codes, and regulations.
- The manufacturer cannot be held responsible for injury or damage resulting from improper, incorrect, and unreasonable use.
- This appliance is not to be used, cleaned, or maintained by persons (including children) with reduced physical, sensory, or mental capabilities or lack of experience and knowledge, without proper supervision or instruction.
- **DO NOT** install or operate equipment that has been misused, abused, neglected, damaged, or altered/modified from original manufactured specifications.
- **DO NOT** modify or alter the appliance. Improper alterations can result in electric shock, personal injury, fire, or death.
- **DO NOT** use electrical appliances inside the food storage compartments of the appliance unless the appliances are approved by the manufacturer.
- The appliance owner is responsible for performing a Personal Protective Equipment (PPE) Hazard Assessment and to ensure adequate protection during maintenance and cleaning procedures.
- Use appropriate tools, safety equipment, and PPE during installation and servicing.
- Only use the appliance for its intended purpose as described in this document. Failure to do so may result in equipment damage, personal injury, or death.
- Overloading, incorrectly installing, or improperly loading shelves can cause shelf failure (as well as negatively affect the appliance's operation), resulting in appliance damage, product damage, or personal injury.
- Keep the area surrounding the appliance clean to avoid appliance damage from debris or pests.

Important Safety Information (cont.)

Personal Injury Warnings

Only qualified technicians should install and service the appliance. For assistance finding a qualified technician, please visit our Service Company Locator at **truemfg.com/support/service-company-locator**. TRUE is solely the appliance manufacturer and is not responsible for installation.

⚠ DANGER!	
	DO NOT allow children to play with or in the appliance. Child entrapment or personal injury can occur.
	DO NOT store or use the following in the vicinity of this or any other appliance: • Gasoline or other flammable vapors and liquids • Combustible or explosive substances, such as aerosol cans with a flammable propellant • Other volatile or flammable substances
	Contact TRUE Manufacturing to locate refrigerant lines and electrical wiring before drilling, cutting or puncturing interior or exterior walls. Failure to do so could result in damage, personal injury, or death.

⚠ WARNING!	
	Only qualified technicians should install and service the appliance. • Use appropriate tools, safety equipment, and personal protective equipment (PPE) during installation and servicing. • **DO NOT** touch the cold surfaces in the freezer compartment when hands are damp or wet. Skin may stick to extremely cold surfaces.
	This product can expose you to chemicals including Di-(2-Ethyl hexyl) Phthalate (DEHP), which is known to the State of California to cause cancer and birth defects or other reproductive harm. For more information go to **P65warnings.ca.gov**.
	Slippery Surfaces! Moisture from improper drainage can create slippery surfaces near the appliance. It is your duty to immediately warn your customers of, and dry, the slippery surface. All wet floor areas must be marked with a wet floor sign.
	Sharp edges! Take care when moving, installing, cleaning, servicing, and maintaining the appliance to avoid cuts. Be sure to take care when reaching under the appliance or handling metal components. • Keep fingers out of pinch point areas, such as the space between appliance doors and surrounding cabinetry. Take care closing doors with children nearby.
	Tip over hazard! Appliance may pose a tipping hazard when uncrating, installing, or moving the appliance. Take appropriate safety precautions. Use of tip over restraints may only reduce (not eliminate) the tipping hazard. Never allow children to climb or hang on drawers, doors, or shelves.
	Crush or cut hazard! Keep clear when uncrating, installing, moving, or servicing the appliance.
	Risk of electric shock or burn! See "Electrical Safety Warnings" for more information.

Important Safety Information (cont.)

Hydrocarbon Refrigerant Warnings

TRUE appliances use hydrocarbon refrigerant (R-290/513A/600a). Check the serial label to identify the appliance's refrigerant. Serial label location varies by model.

⚠ DANGER!

Risk of fire or explosion! Flammable refrigerant used.

- All servicing and maintenance must be performed by qualified technicians. This is to minimize the risk of fire or personal injury due to incorrect parts or improper service.
- Check the serial label to identify the appliance's refrigerant. Serial label location varies by model.
- **DO NOT** damage the refrigeration system during transportation and installation.
- If the appliance is damaged, verify the refrigeration system's integrity is not compromised before proceeding.
- Never use sharp objects or tools to remove ice or frost. **DO NOT** use mechanical devices to accelerate defrost.
- Dispose of in accordance with all applicable laws, codes, and regulations. Follow all safety precautions associated with handling flammable refrigerant.
- **DO NOT** use electrical appliances inside the food storage compartments of the appliance unless the appliances are of the type recommended by the manufacturer.

Appliance Disposal Warnings

⚠ DANGER!

Risk of child entrapment!

Children can get trapped inside discarded appliances and suffocate. Never dispose of your appliance without taking precautions to prevent child entrapment, even if the appliance only sits unattended for a short period of time.

Child entrapment precautions include the following:

- Remove all doors (or drawers for drawer units).
- Leave all interior drawers and shelving in place to make climbing (and fitting) inside the appliance more difficult.

Risk of fire or explosion! Flammable refrigerant and insulation used. Dispose of in accordance with all applicable laws, codes, and regulations. Follow all safety precautions associated with handling flammable refrigerant and insulation.

DO NOT dispose of your appliance with household waste.

Important Safety Information (cont.)

Electrical Safety Warnings

⚠ WARNING!

Risk of electric shock, burn, or fire!

- It is the appliance owner's responsibility to ensure the electrical connection meets all applicable building codes. Failure to meet these code requirements can result in appliance damage, fire, electric shock or burns, serious personal injury, or death.
- Before connecting your appliance to the power supply, verify the supply voltage and circuit rating match the appliance. Correct improper supply voltage or circuit size immediately.
- Before connecting your appliance to the power supply, verify the power supply is correctly grounded. If the power supply is not grounded, correct immediately. TRUE recommends hiring a qualified electrician to inspect your wall outlet and circuit to ensure they are properly grounded
- **DO NOT** clean appliance with a pressure washer or hose. DO NOT immerse power cord in water.
- Powering off an electronic control or setting temperature controls to 0 (off position) does not remove power from all components. Unplug the appliance or turn off the power supply before installation or servicing.
- The appliance should receive power from its own individual dedicated electrical circuit. This provides the best performance and prevents overloading the power supply.
- **The original equipment manufacturer (OEM) power cord has a grounding plug to minimize the possibility of electrical shock.**
  - Never remove the ground prong from the power cord! For personal safety, this appliance must be properly grounded.
  - **Never use an extension cord!** An extension cord is any component that adds length to the OEM power cord when connecting the cord to a power source.
  - **Never use an adapter plug!** An adapter plug alters the OEM plug configuration when connecting the plug to a power source.
- **Never use a power cord that shows cracks or abrasion damage along its length or at either end.**
  - Immediately have a qualified technician replace damaged OEM power cords with OEM components.
  - Never unplug your appliance by pulling on the power cord. Always grip the plug and pull the plug straight out of the outlet.
  - Take care to prevent rolling over or damaging the power cord when moving the appliance.
  - Never use the power cord to prevent appliance movement. Always use adequate means to keep the appliance in place without transmitting stress to the power cord.
  - Keep power cord away from heated surfaces.
  - **DO NOT** let power cord hang over edge of table or counter.
  - **DO NOT** excessively bend or place heavy articles on the power cord.

NOTICE!

TRUE will not warranty the following:

- Compressor failures due to improper incoming voltage.
- Appliance with tampered OEM power cords.
- Appliance connected to adapters or extension cords.

For more details, see TRUE's full warranty statement.

About Your Appliance & Installation Requirements

USER ACTION!

TRUE is not responsible for damage incurred during shipment. Always carefully inspect for freight damage before receiving and installing your appliance. If there is damage, note all damage on the delivery receipt, immediately file a claim with the delivery freight carrier, and contact TRUE. **Do not install the appliance or put it in service.**

Thank you for choosing TRUE Manufacturing to meet your refrigeration needs. TRUE highly recommends a qualified technician and electrician install your appliance to ensure correct installation. The cost of professional installation is money well spent. Only qualified technicians should install and service the appliance.

For assistance finding a qualified technician, please visit our Service Company Locator at **truemfg.com/support/service-company-locator**. TRUE is solely the appliance manufacturer and is not responsible for installation.

The appliance owner is responsible for proper installation and maintaining the appliance as described in this document. Routine care and maintenance procedures are not covered by TRUE's warranty.

Appliance Specifications

Some things to know about your appliance are as follows:

- Appliance tested for IEC EN 60335-2-89 Climate Class 5 [109°F (43°C) temperature, 40% relative humidity] for safety.
- Appliance tested to EN 23953-2:2015 Climate Class 3 [77°F (25°C), 55% relative humidity] for performance.
- For proper operation, ambient temperatures shall not be less than 60°F (15.5°C).
- Appliance is not for the storage and/or display of potentially hazardous foods when the temperature control is set above 41˚F (5˚C).
- Appliance is not suitable for outdoor use, unless otherwise stated on the serial label.
- Appliance is not suitable for an area where a pressure washer or hose may be used.
- Always plug the appliance into its own individual dedicated electrical circuit!
- **DO NOT** use extension cords or adapter plugs.
- Before connecting your appliance to the power supply, verify the incoming voltage (±5%) and the amps match the operation ratings on the appliance's serial label. Correct improper incoming voltage or amps immediately. Serial label location varies by model.
- Before connecting your appliance to the power supply, verify the power supply is correctly grounded. If the power supply is not grounded, correct immediately.
- Ensure the installation location will provide adequate clearances and sufficient airflow for the appliance. See "Clearances".
- Read and follow all warnings and maintenance instructions. Failure to do so may result in damage and void the warranty on your appliance.

About Your Appliance & Installation Requirements (cont.)

Clearances

NOTICE!

Warranty is void if ventilation is insufficient.

Be sure your appliance has the required surrounding clearances for ventilation purposes. Keep all ventilation openings in the appliance enclosure or structure housing the appliance clear of obstruction.

CLEARANCES

MODEL	TOP	SIDES	BACK
G4SM	0" (0 mm)	0" (0 mm)	1" (25.4 mm)
GDM-05/05F	12" Open (304.8 mm)	1" (25.4 mm)	1" (25.4 mm)
GDM-07F	1" (25.4 mm)	1" (25.4 mm)	3" (76.2 mm)
GDM-10/12/10-58	1" (25.4 mm)	0" (0 mm)	1" (25.4 mm)
GDM-11SD	0" (0 mm)	0" (0 mm)	1" (25.4 mm)
GDM Freezers	3" (76.2 mm)	0" (0 mm)	3" (76.2 mm)
GDM Refrigerators	0" (0 mm)	0" (0 mm)	1" (25.4 mm)
GEM	0" (0 mm)	0" (0 mm)	1" (25.4 mm)

About Your Appliance & Installation Requirements (cont.)

Electrical Requirements

USER ACTION!

Find a copy of the wiring diagram with our serial number lookup at **truemfg.com/support/serial-number-lookup**.

Wire gauge chart (115V)

115 Volts	Distance in Feet to Center of Load											
AMPS	20	30	40	50	60	70	80	90	100	120	140	160
2	14	14	14	14	14	14	14	14	14	14	14	14
3	14	14	14	14	14	14	14	14	14	14	14	12
4	14	14	14	14	14	14	14	14	14	12	12	12
5	14	14	14	14	14	14	14	12	12	12	10	10
6	14	14	14	14	14	14	12	12	12	10	10	10
7	14	14	14	14	14	12	12	12	10	10	10	8
8	14	14	14	14	12	12	12	10	10	10	8	8
9	14	14	14	12	12	12	10	10	10	8	8	8
10	14	14	14	12	12	10	10	10	10	8	8	8
12	14	14	12	12	10	10	10	8	8	8	8	6
14	12	12	12	10	10	10	8	8	8	6	6	6
16	12	12	12	10	10	8	8	8	8	6	6	6
18	12	12	10	10	8	8	8	8	8	8	8	5
20	12	12	10	10	8	8	8	6	6	6	5	5
25	10	10	10	8	8	6	6	6	6	5	4	4
30	10	10	8	8	6	6	6	6	5	4	4	3

Wire gauge chart (230V)

230 Volts	Distance in Feet to Center of Load											
AMPS	20	30	40	50	60	70	80	90	100	120	140	160
5	14	14	14	14	14	14	14	14	14	14	14	14
6	14	14	14	14	14	14	14	14	14	14	14	12
7	14	14	14	14	14	14	14	14	14	14	12	12
8	14	14	14	14	14	14	14	14	14	12	12	12
9	14	14	14	14	14	14	14	14	12	12	12	10
10	14	14	14	14	14	14	14	12	12	12	10	10
12	14	14	14	14	14	14	12	12	12	10	10	10
14	12	12	12	12	12	12	12	12	10	10	10	8
16	12	12	12	12	12	12	12	10	10	10	8	8
18	12	12	12	12	12	12	10	10	10	8	8	8
20	12	12	12	12	10	10	10	10	10	8	8	8
25	10	10	10	10	10	10	10	10	8	8	6	6
30	10	10	10	10	10	10	8	8	8	6	6	6

Electrical Installation & Safety

NEMA Plug Configurations

60 HZ USE ONLY!

TRUE uses these types of NEMA plugs shown. If you **DO NOT** have the proper outlet, have a licensed electrician verify and install the correct power source.

International (IEC) Plugs Only

International appliances may be supplied with a power cord that will require installation. Install this cord before connecting the appliance to a power source.

NOTICE › International plug configurations will vary by country and voltage.

Installation

Fully seat the power cord into the appliance receptacle until it locks in position. See fig. 1.

Removal

Depress the red button. See fig. 2.

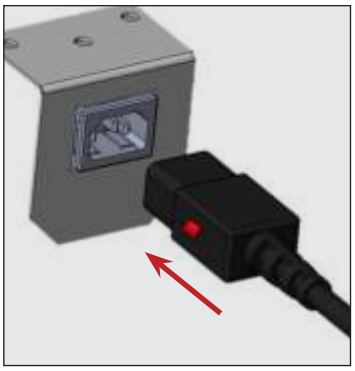

Fig. 1. Fully insert the power cord into the receptacle.

Fig. 2. Push the red button to remove the plug.

About Your Appliance & Installation Requirements (cont.)

Wiring Instruction Advisement (115V only)

⚠ CAUTION!

It is the customer's responsibility to make sure receptacle wiring meets all local electrical codes.

TRUE recommends **hiring a licensed qualified electrician** to make this change.

Electrical shock or burn hazard! Unplug the appliance or turn off the power supply before proceeding.

NOTICE!

Power cord conversion kit available for purchase to match current installation location's wiring configuration.

Follow the instructions below to convert your TRUE appliance from a 4-wire circuit and a 4-prong NEMA 14-20P (see components in fig. 1) to a 3-wire circuit and a 3-prong NEMA 5-20P (see components in fig. 2).

Wiring Conversion

Receptacle Box

1. Turn off the circuit breaker.
2. Disconnect the existing receptacle.
3. Cap the red wire.
4. Connect the black, white, and green wires to the 3-prong NEMA 5-20P plug per instructions on the receptacle.

Breaker Panel

1. Disconnect and remove the existing double-pole breaker.
2. Install a single-pole breaker.
3. Connect the black wire to the replacement breaker.
4. Cap the red wire.
5. Turn on the circuit breaker.

Fig. 1. 4-wire configuration and 4-prong NEMA 14-20P/20R.

Fig. 2. 3-wire configuration and 3-prong NEMA 5-20P/20R.

Installation & Setup

⚠ WARNING!	
	The appliance owner is responsible for performing a Personal Protective Equipment (PPE) hazard Assessment and to ensure adequate protection during maintenance and cleaning procedures. **Use appropriate tools**, safety equipment, and PPE during installation and servicing.
	Sharp edges! Take care when moving, installing, cleaning, servicing and maintaining the appliance to avoid cuts. Be sure to take care when reaching under the appliance or handling metal components. Keep fingers out of pinch point areas, such as the space between appliance doors and surrounding appliances. Take care closing doors with children nearby.
	Risk of electrical shock or burn! Powering off an electronic control or setting temperature controls to the 0 (off) position does not remove power from all components. Unplug the appliance or turn off the power supply before installation or servicing.
	Tip over hazard! Appliance may pose a tipping hazard when uncrating, installing or moving the appliance. Take appropriate safety precautions. Use of tip over restraints may only reduce (not eliminate) the tipping hazard. Never allow children to climb or hand on drawers, doors or shelves.
	Crush or cut hazard! Keep clear when uncrating, installing, moving, or servicing the appliance.

Uncrating

USER ACTION!	
	• If the appliance is damaged, note all damage on the delivery receipt, immediately file a claim with he delivery freight carrier, and contact TRUE. **DO NOT install the appliance or put it in service.** • If the appliance is laid on its back or side, be sure to leave the appliance upright twice the time it has been laying down (up to four (4) hours) before plugging the appliance into a power source. If this time exceeds four (4) hours, let the appliance sit upright for 24 hours before powering the appliance.

NOTICE!	
	Keys for appliances with door locks are located in the warranty packet.

Required Tools

Required tools include (but may not be limited to) the following:

- Adjustable wrench
- Phillips screwdriver
- Level

Installation & Setup (cont.)

Procedure

1. Remove the outer packaging (cardboard and bubble wrap or Styrofoam corner and clear plastic). See fig. 1. Inspect for concealed damage. **Again, immediately file a claim with the freight carrier if there is damage.**

   NOTICE › **DO NOT** remove the shipping bracket (glass swing doors; fig. 2) or the shipping blocks (glass slide doors; fig. 3) until the appliance is installed in its final location. **Do not discard;** use the bracket/blocks when next moving the appliance.

2. With an adjustable wrench, remove all shipping bolts securing the wood skid to the bottom of the appliance. See fig. 4.

   NOTICE › Move the appliance as close as possible to the final location before removing the wooden skid. Some models may require removing the front and/or rear grill/cover to access the shipping bolts.

3. If leveling legs or castors **will not be used**, remove the appliance from the wood skid and set the skid aside.

   NOTICE › **DO NOT** lift the appliance by the counter tops, doors, drawers, or grills.

   If leveling legs or castors **will be used**, rotate the appliance on the skid (see fig. 5) and see Leveling Screw, Leg or Castor Installation on page 15.

Fig. 1. Remove the existing packaging.

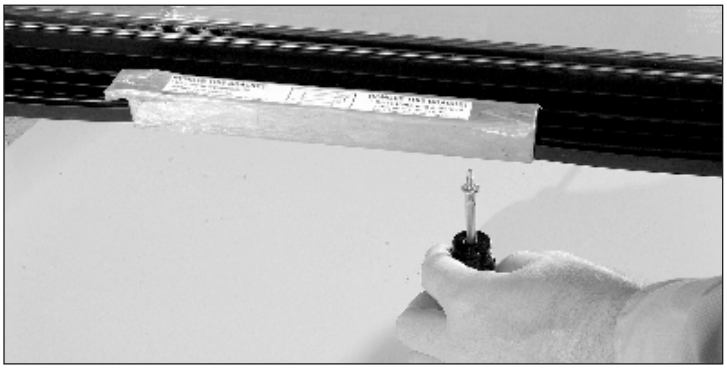

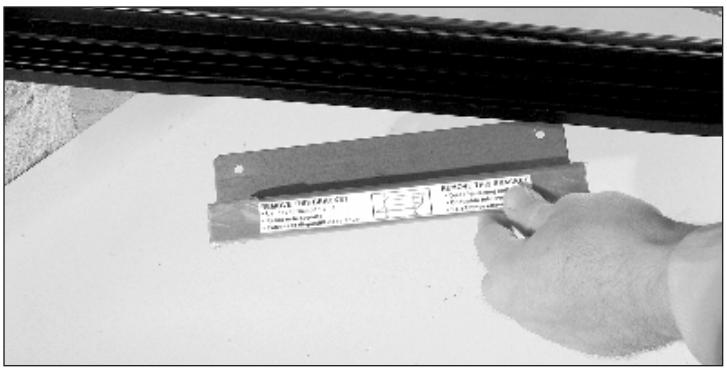

Fig. 2. Remove the glass swing door shipping bracket, if so equipped. Do not discard.

Installation & Setup (cont.)

Fig. 3. Glass slide door shipping block locations. Remove if so equipped and do not discard.

Fig. 4. Shipping bolt locations.

Fig. 5. When lifting the appliance, do not use counter tops, doors/drawers, or grills as a lifting point.

Installation & Setup (cont.)

Appliance Location

- Ensure that the drain hose or hoses are positioned in the pan.
- Free the plug and cord from inside the lower rear of the cooler (**DO NOT** plug in).
- Place the appliance close enough to the electrical supply so that extension cords are never used.

Leveling Screw, Leg, or Castor Installation

⚠ WARNING!

Tipping hazard! Incorrect installation of leveling legs or castors can cause a tipping hazard.

ALWAYS be sure leveling legs or castors (and shims) are snug against the rail assembly or mounting plate.

ALWAYS verify center castors or leveling legs fully contact the floor after leveling the appliance. See fig. below.

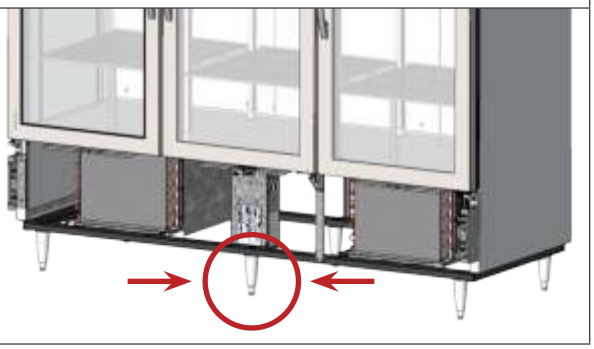

Leveling legs are provided to assist with leveling the appliance. Adjustable legs provide 6" (152 mm) of clearance under the appliance. Castors provide appliance mobility.

Required Tools

Required tools include (but may not be limited to) the following:

- Adjustable Wrench

Procedure – Leveling Screws

If leveling screws are not factory installed, then, with access to the appliance bottom, install the leveling screws into the threaded holes in the frame rail or appliance bottom. See figs. 1–3.

Fig. 1. Leveling screw.

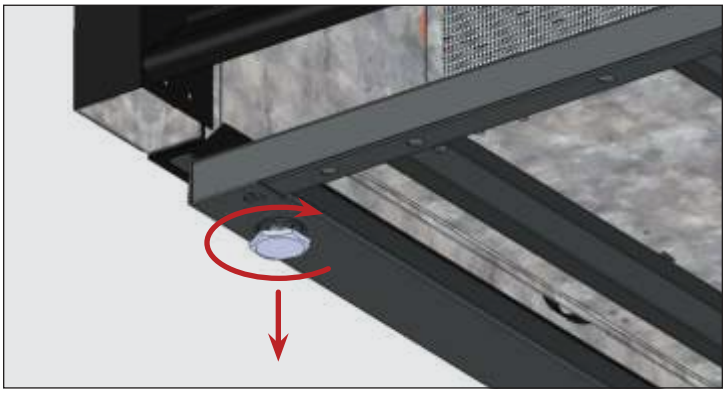

Fig. 2. Turn the leveling screws clockwise to lower the appliance.

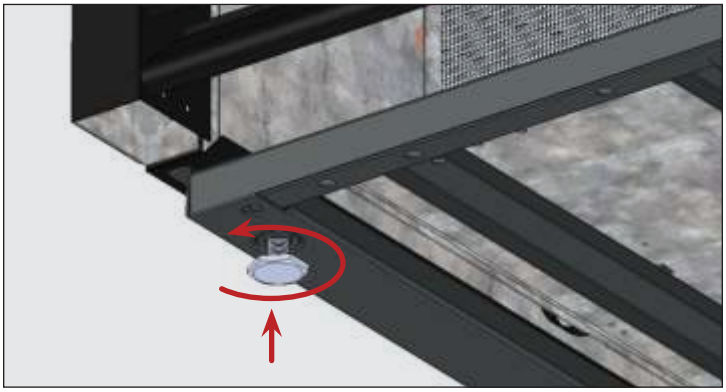

Fig. 3. Turn the leveling screws counterclockwise to raise the appliance.

Installation & Setup (cont.)

Procedure – 6" (152 mm) Leveling Legs

1. Access the appliance bottom.
2. If present, remove the leveling screws.
3. Thread the leveling legs into the frame rail or appliance bottom. See figs. 4 and 5.
4. Verify that the appliance is level. See "Level the Appliance" (pg. 17).
5. If the appliance is not level, gently lift and support the low end of the appliance. Then, with an adjustable wrench, screw the leveling leg bottom stems in or out to level and support the appliance. See fig. 4 and 6.

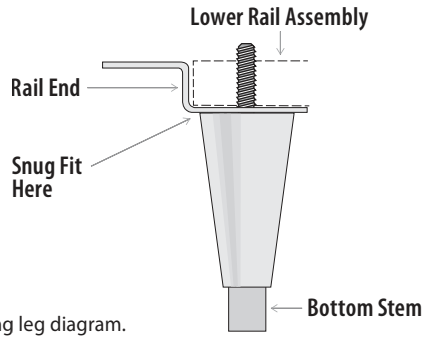

Fig. 4. Leveling leg diagram.

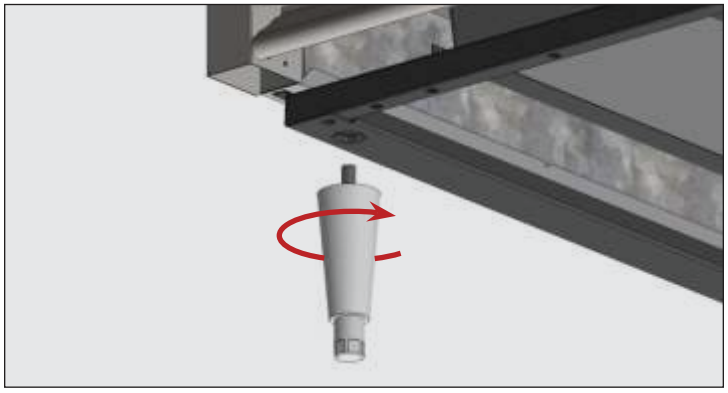

Fig. 5. Screw the leveling legs into the threaded holes.

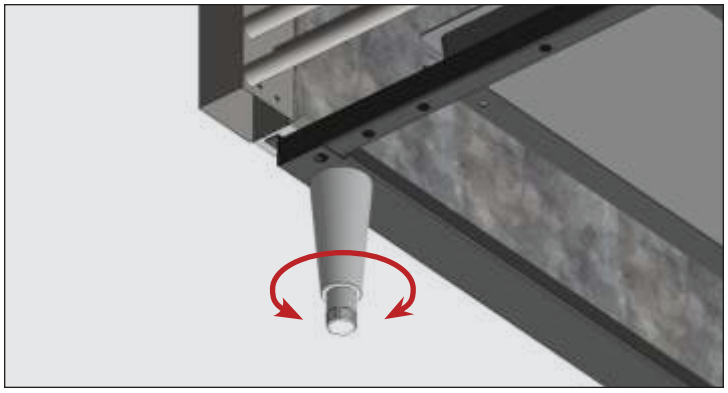

Fig. 6. Turn the bottom stem to level the appliance.

Procedure — Castors

USER ACTION!

Install castors with brakes in the front.

1. Access the appliance bottom.
2. If present, remove the leveling screws.
3. Thread the castors into the frame rail or appliance bottom. See figs. 7 and 8.
4. Verify the appliance is level. See "Level the Appliance" (pg. 17).
5. On the low end of the appliance, loosen the castor bolt enough to slide provided castor shims between the castor bearing and the bottom rail of the appliance. See fig. 9.
6. Install the desired number of shims. See fig. 9.
   - If more than one shim is used, be sure shim slots are offset. See fig. 10.
   - **DO NOT** use more than four (4) shims on a castor.
   - Be sure each shim touches the castor stem.
7. Tighten and secure the shims and castors.
8. Verify the appliance is level.
9. If the appliance is not level, repeat the steps 3 – 6 until the appliance is level and supported.

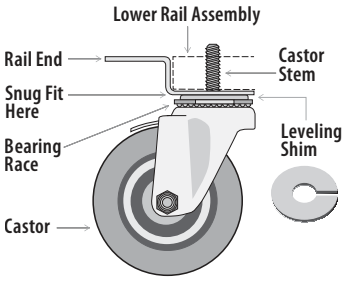

Fig. 7. Castor diagram.

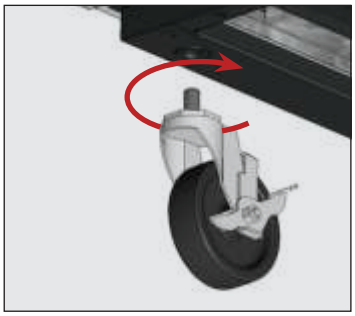

Fig. 8. Screw the castors into the threaded holes.

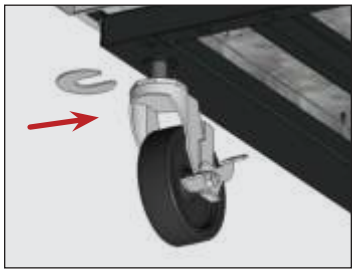

Fig. 9. Insert the castor shim(s). be sure to tighten the castor stem.

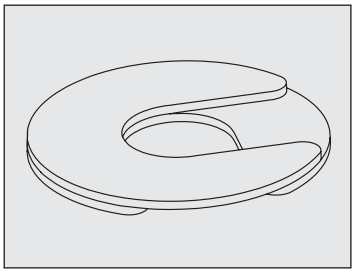

Fig. 10. Install multiple shims with offset slots.

Installation & Setup (cont.)

Castor Installation (GDM-10/12)

1. Position Styrofoam or cardboard on the floor behind the appliance.
2. Carefully lay the appliance on its back.
3. Remove the front louver grill.
4. Remove the shipping bolts.
5. Install the castors into the threaded holes.

   NOTICE › Be sure to position castors with brakes at the appliance's front.

6. Position the front castors forward and engage the brakes.

⚠ WARNING!

Tipping hazard! Appliance may tip if front castors are not positioned forward and locked.

7. Install the front louver grill.
8. Carefully lift the appliance upright.

   NOTICE › Slowly lift the appliance upright to avoid damaging the lower rail assembly.

9. Verify the appliance is level. Adjust level as needed. See "Leveling Screw, Leg, or Castor Installation" (pg. 15).

Level the Appliance

⚠ WARNING!

Tipping hazard! ALWAYS verify center castors or leveling legs fully contact the floor after leveling the appliance. See fig. below.

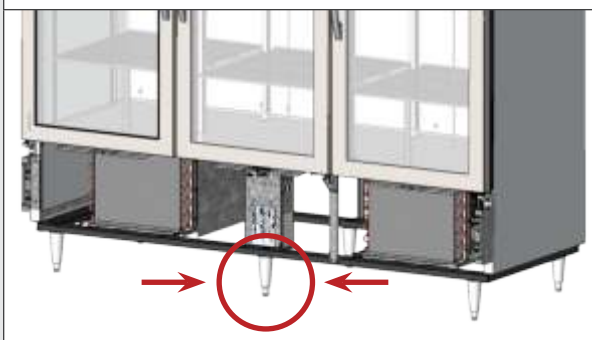

Proper leveling of your TRUE appliance is critical to operating success (for non-mobile appliances). Leveling impacts effective condensate removal and door operation.

See "Leveling Screw, Leg or Castor Installation" (pg. 15) for level adjustment and shimming information.

Procedure

Position the appliance in its final installation location. Then, level the appliance front-to-back and side-to-side. See fig. 1.

1. Position the level on the inside floor of the appliance near the doors (level parallel to appliance front). Level the appliance.
2. Position the level at the inside rear of the appliance (level parallel to appliance back). Level the appliance.
3. Position the level on the left and right inside floor (level parallel to appliance sides). Level the appliance.

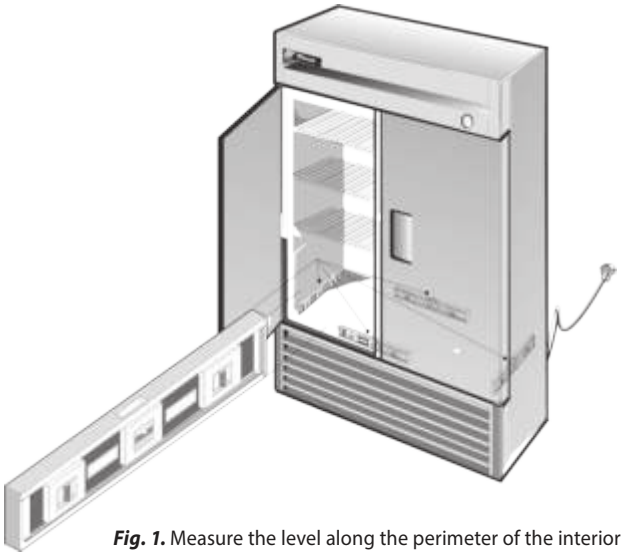

Fig. 1. Measure the level along the perimeter of the interior floor.

Installation & Setup (cont.)

Seal the Appliance to the Floor

USER ACTION!

Asphalt floors are susceptible to chemicals. TRUE recommends installing a layer of tape between the asphalt and the sealant to protect the floor.

The following procedure describes sealing a non-mobile appliance to the floor for NSF standards. This may not be required for your application.

Procedure

1. Position the appliance in its final installation location. Be sure to leave adequate clearance between the back and sides per "Clearances" (pg. 9) to ensure proper ventilation.
2. Level the appliance front-to-back and side-to-side. See “Level the Appliance” (pg. 17).
3. Draw an outline of the appliance base on the floor.
4. Raise and block the front side of the appliance.
5. Apply a bead of NSF-approved sealant (see list below) to the floor, 1/2" (13 mm) inside the front part of the outline drawn in step 4. The bead of sealant must be heavy enough to seal the entire appliance surface when the appliance is lowered on top of the sealant.
6. Raise and block the rear of the appliance.
7. Apply sealant to the floor on the other three sides, as outlined in step 5.
8. Examine the appliance to ensure that it is sealed to the floor around the entire perimeter.

NSF-Approved Sealants

- 3M #ECU800 Caulk
- 3M #ECU2185 Caulk
- 3M #ECU1055 Bead
- 3M #ECU1202 Bead
- Armstrong Cork – Rubber Caulk
- Products Research Co. #5000 Rubber Caulk
- G.E. Silicone Sealer
- Dow Corning Silicone Sealer

Installation & Setup (cont.)

Shelf Installation

⚠ WARNING!

Overloading, incorrectly installing, or improperly loading shelves can cause shelf failure and negatively affect appliance operation, resulting in appliance damage, product damage, or personal injury.

DO NOT use pliers or any crimping tools when installing shelf clips. Altering shelf clips in any way can lead to shelving instability.

Installation Tips

- Install **all** the shelf clips before installing any shelves.
- Start at the bottom shelf and work your way up.
- Always lay the back of each shelf down on the rear clips before the front.

Procedure

1. Hook the shelf clips into the shelf standards. See fig. 1.
2. Push up on the bottom of the clip. See fig. 2.

   NOTICE › You may need to squeeze or twist the bottom of the shelf clip for proper installation. Position all four shelf clips equal in distance from the floor for flat shelves.
3. Ensure the shelf clip is not loose or able to wiggle out of the shelf standard. See figs. 3 and 4.
4. Place the shelves on the shelf clips with the cross support bars facing down.

   NOTICE › Be sure all shelf corners are properly seated.

TrueTrac Organizers

TrueTrac Organizers come with a package of shelf retainer clips.

Install the clips on the side of the organizer towards the rear. See fig. 5.

Shelf Adjustment

Shelving is adjustable for customer application. This appliance meets the IEC Shelf Weight Capacity of 47lb/ft^2 (230kg/m^2).

Fig. 1. Installing top tab of shelf clip.

Fig. 2. The bottom tab of the shelf clip will fit tightly.

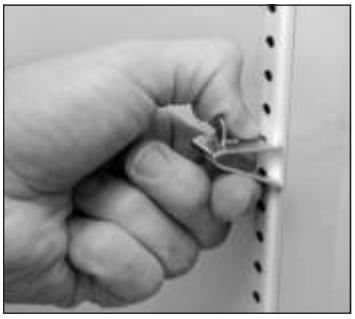

Fig. 3. You may need to squeeze or twist the bottom of the shelf clip to install.

Fig. 4. Installed shelf clip.

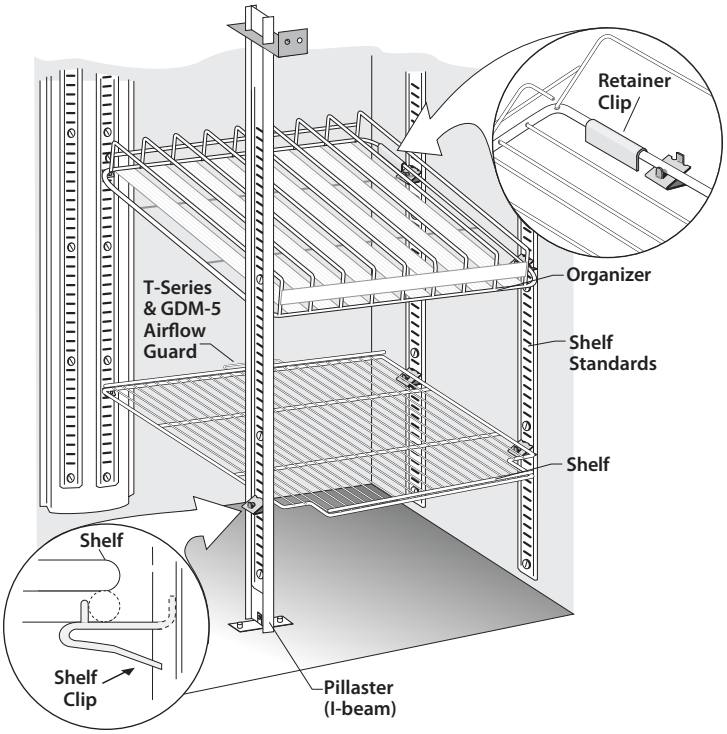

Fig. 5. GDM-5 models include an airflow guard on the rear shelves to maintain an air space a the rear of the appliance.

Installation & Setup (cont.)

G4SM-23RGS Shelf Bracket Assembly

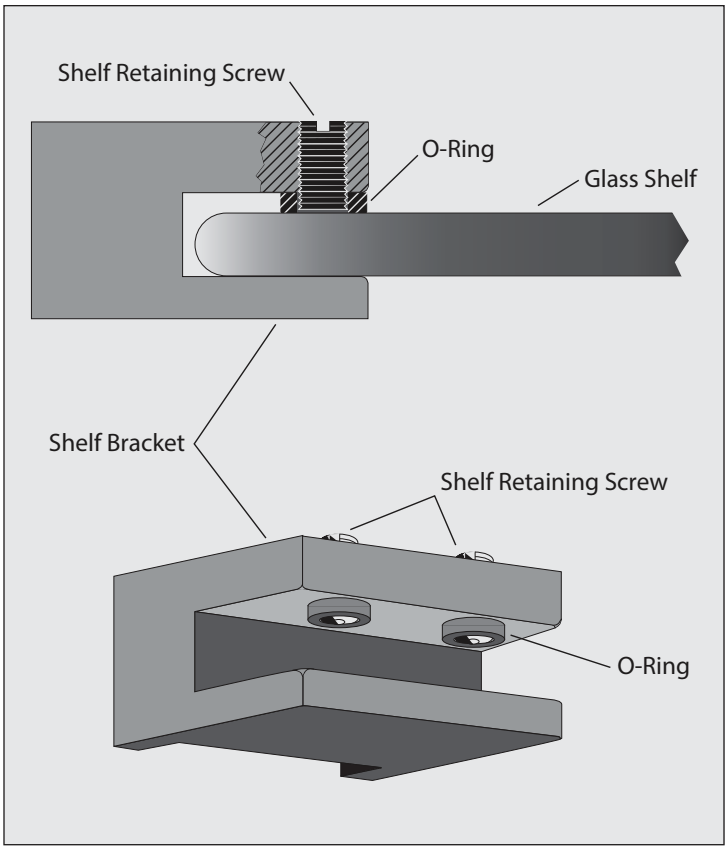

Installing Shelves (GDM-30 only)

Tape door handles back to the appliance when installing shelves.

Appliance Operation

⚠ WARNING – SPOILAGE!

The owner is solely responsible for ensuring safe holding temperature levels for all food items. Failure to do so may result in unsafe food products. Loss or spoilage of products in your appliance is not covered by warranty. In addition to following recommended installation procedures, run the appliance for 24 hours prior to usage to verify operation.

Startup

USER ACTION!

Before loading product, run your TRUE appliance empty for 24 hours to verify proper operation. Remember, our factory warranty **DOES NOT** cover product loss!

- The compressor is ready to operate when the appliance is purchased. All you need to do is plug in the cooler.
- Good air flow inside your TRUE appliance is critical. Take care to prevent product from pressing against the sides or back wall and coming within 4" (101.6 mm) of the evaporator housing. Refrigerated air off the evaporator coil must circulate throughout the appliance for even product temperatures.
- Excessive tampering with the control could lead to service difficulties. If replacing the temperature control is ever needed, be sure to order the replacement from your TRUE dealer or recommended service agent.
- All covers and access panels must be in place and properly secured before operating this appliance.

Appliance Operation (cont.)

Temperature Control & Light Switch Location

Light switch location varies by GDM model. Most models have the light switch located on the right side of the ceiling, next to the temperature control.

The light symbol shows the approximate location of the light switch.

The electronic temperature control can act as a light switch. To control the light, press the up arrow ▲M.

True FlexTemp™

The TRUE FlexTemp shifts the appliance temperature control settings between that of a refrigerator and that of a freezer. Flip the switch behind the front louver grill to change between modes. See switch location in the figure below.

Light Switch on Glass Door Models

Inside the top ceiling.

Mechanical or Electronic Temperature Control w/o Digital Display

Inside top right ceiling or back wall.

Electronic Temperature Control with Digital Display

Behind the front bottom louvered grill.

FlexTemp Switch

Fig. 1. True FlexTemp™ switch location.

Appliance Operation (cont.)

General Sequence of Operation — Refrigerator and Freezer Appliances

USER ACTION!

For more information regarding a appliance's temperature control adjustment or general sequence of operation, please see our Temperature Control Adjustment—Sequence of Operation Manual in our resource library at truemfg.com/service-manuals/sequence-of-operation or scan the **QR code**.

When the appliance is plugged in:

- Interior lights will illuminate on glass door models (see Temperature Control & Light Switch Location, pg. 22).
- An electronic control with digital display will illuminate (if installed).
- There may be a short delay before the compressor and/or evaporator fan(s) start. This delay may be determined by time or by temperature, which could be the result of an initial defrost event that will last at least 6 minutes.
- The temperature control/thermostat may cycle the compressor and evaporator fan(s) on and off together. Every appliance will require a defrost event to ensure the evaporator coil remains clear of frost and ice buildup. Defrost is initiated by a defrost timer or by the electronic control.

EXCEPTION – Models TSID, TDBD, TCGG, and TMW do not have an evaporator fan(s).

- The temperature control/thermostat senses either an evaporator coil temperature or air temperature, NOT product temperature.
- An analog thermometer, digital thermometer, or electronic control display may reflect the refrigeration cycle swings of up and down temperatures, NOT product temperature. **The most accurate method to determine a appliance's operation is to verify the product temperature.**
- Refrigerators with mechanical temperature controls will defrost during every compressor off-cycle.
- Freezers with mechanical temperature controls will defrost by time initiation as determined by a defrost timer.

EXCEPTION – Models TFM, TDC, THDC and TMW require a manual defrost. The frequency of this manual defrost will depend on the appliance's usage and ambient conditions.

- An electronic control with a digital display (if installed) will show **dEF** during defrost.

NOTICE › The display may have a short delay before showing a temperature after a defrost event has expired and instead show **dEF** during a refrigeration cycle.

- Models with an analog or digital thermometer may show higher than normal temperatures during defrost.
- A refrigerator will use the evaporator fans to clear the coil during defrost.

EXCEPTION – Models TSID, TDBD, and TCGG do not have an evaporator fan(s).

- A freezer will use heaters to clear the evaporator coil during defrost.

NOTICE › The evaporator coil heater and drain tube heater are only energized during defrost. Defrost is terminated when a specific evaporator coil temperature is reached or by a time duration.

Maintenance & Servicing

⚠ WARNING!	
	• **Only qualified technicians** should install and service the appliance. For assistance finding a qualified technician, please visit our Service Company Locator at **truemfg.com/support/service-company-locator**. • **Turn off and lockout all utilities** (gas, electric, water) according to approved practices during maintenance or servicing.
	The appliance owner is responsible for performing a Personal Protective Equipment (PPE) Hazard Assessment and ensuring adequate protection during maintenance and cleaning procedures. Use appropriate tools, safety equipment, and PPE during installation and servicing.
	Sharp Edges! • Take care when moving, installing, cleaning, servicing, and maintaining the ice machine to avoid cuts. Be sure to take care when reaching under the ice machine or handling metal components. • Stay clear of pinch point areas, such as the space between appliance doors and surrounding cabinetry. Take care closing doors with children nearby.

⚠ WARNING!	
	Risk of electric shock or burn! • Powering off an electronic control or setting temperature controls to the 0 (off) position **DOES NOT remove power from all components**. Unplug the appliance or turn off the power supply before installation or servicing. • **DO NOT** clean appliance with a pressure washer or hose.
	Flammable refrigerant/insulation used! Have a licensed service provider service your appliance to minimize the risk of possible ignition due to incorrect parts or improper service and to ensure the operator's health and safety.
	Crush or cut hazard! Keep clear when uncrating, installing, moving, or servicing the appliance.
	Slippery Surfaces! Moisture from improper drainage can create slippery surfaces near the appliance. It is your duty to immediately warn your customers of, and dry, the slippery surface. All wet floor areas must be marked with a wet floor sign.

Maintenance & Servicing (cont.)

USER ACTION!

- For additional maintenance instruction, please visit the media center at **truemfg.com**.
- Any appliance adjustments are to be made **AFTER** the appliance has been verified level and properly supported.

NOTICE!

The appliance owner is responsible for maintaining the appliance as described in the installation manual. Routine care and maintenance procedures are not covered by TRUE's warranty.

Component Replacement

- Replace components with original equipment manufacturer (OEM) components such as those shown in fig. 1. OEM parts minimize the risk of possible ignition due to incorrect parts. Use of non-OEM components may void TRUE's warranty.
- Have a licensed service provider service your appliance to minimize the risk of possible ignition due to incorrect parts or improper service and to ensure the operator's health and safety.

Fig. 1. Example of OEM parts.

Maintenance & Servicing (cont.)

Recommended Maintenance

See recommended maintenance tasks and frequencies below. Some tasks may be required more frequently based on your installation.

Maintenance Tasks	Monthly	Quarterly	Annually
Verify the appliance maintains product temperature.	X	X	X
Inspect power cord for damage; if damaged, replace immediately.	X	X	X
Verify the power cord is fully plugged into the wall receptacle			X
Inspect the overall condition of the appliance and its components (such as castors, doors, and hinges).	X	X	X
Verify operation of all moving parts (such as fan motors, doors and door cords).			X
Check physical condition of all gaskets; verify gaskets seal correctly.		X	X
Inspect any lamps, lamp holder connections, LED modules, and LED module connections.	X	X	X
Check all condenser coils (fronts and backs)for dust and debris; if present, clear the debris.	X	X	X
Check physical condition of all condenser coils and evaporator coils; straighten coil fins as needed.		X	X
Check all evaporator coils for dust and debris; if present, clear the debris.		X	X
Verify the drain line is clear of debris.		X	X

Maintenance & Servicing (cont.)

Model: _____ **Serial Number:** _____

Jan.	Feb.	Mar.	Apr.	May	Jun.	Jul.	Aug.	Sep.	Oct.	Nov.	Dec.

Maintenance & Servicing (cont.)

Condenser Coil Cleaning

⚠ WARNING!

The appliance owner is responsible for performing a Personal Protective Equipment (PPE) Hazard Assessment and ensuring adequate protection during maintenance and cleaning procedures.

Use appropriate tools, safety equipment, and PPE during installation and servicing.

Risk of electric shock or burn!

- Unplug the appliance or turn off the power supply before installation or servicing.
- **DO NOT** clean appliance with a pressure washer or hose.

Sharp edges! Coil fins are sharp and metal components can have sharp edges. Take care when moving, installing, cleaning, servicing, and maintaining the appliance to avoid cuts.

Risk of eye injury! Airborne dust and debris can cause eye injury. Eye protection recommended.

NOTICE!

The cleaning of the condenser coil is not covered by warranty!

Required Tools

Required tools include (but may not be limited to) the following:

- 1/4" nut driver
- 3/8" nut driver
- Stiff bristle brush
- Tank of compressed air
- Vacuum cleaner
- Flashlight
- Eye protection
- Gloves

Procedure

1. Unplug the appliance or turn off the power supply.
2. Remove the front louvered grill from the appliance. See figs. 1-3.
3. With a stiff bristle brush, carefully clean accumulated dirt from the front condenser coil fins. See fig. 4.
4. With the dirt removed from the coil surface, use a flashlight to verify you can see clearly through the coil. See fig. 5.
   - If the view is clear, carefully vacuum any dirt around or behind the condensing unit area. Then reinstall the front louver grill, restore power, and verify operation.
   - If the view is still blocked with dirt, proceed to the next step.
5. Remove the condenser base bolts. See fig. 6.
6. Remove the condenser coil brackets (if applicable).
7. Carefully slide the condensing unit out (tubing connections are flexible).
8. Gently blow compressed air or CO_2 through the coil until the coil is clean.
9. Carefully vacuum any dirt around and behind the condensing unit area.
10. Reinstall the coil brackets (if applicable). Then, carefully slide the compressor assembly back into position and reinstall.
11. Reinstall the front louver grill, restore power to the appliance, and verify operation.

Maintenance & Servicing (cont.)

Fig. 1. Swing door louver grill screw location.

Fig. 2. Slide door louver grill screw location.

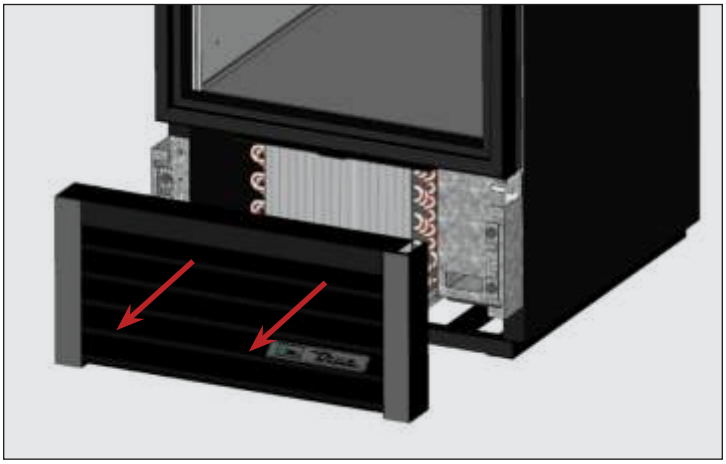

Fig. 3. Carefully remove the grill.

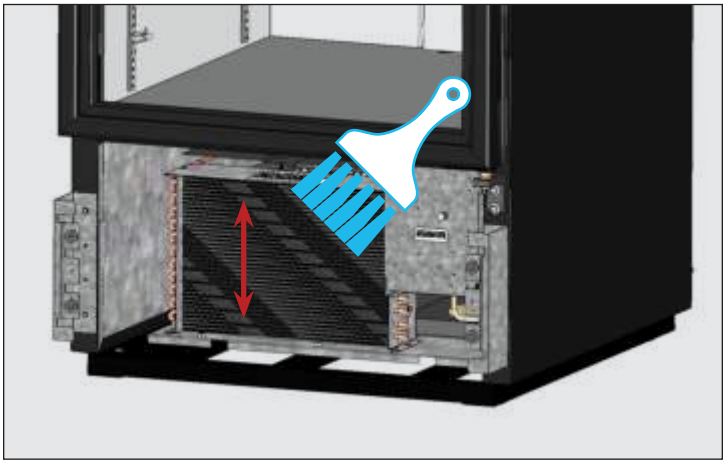

Fig. 4. Never brush across the coil fins.

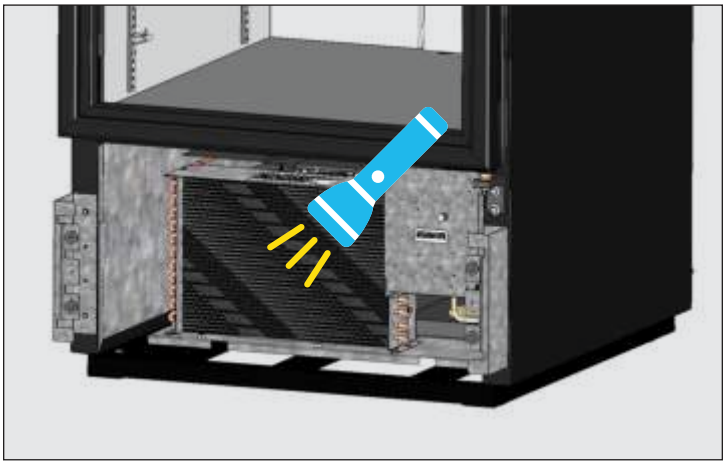

Fig. 5. Verify all blockages have been removed.

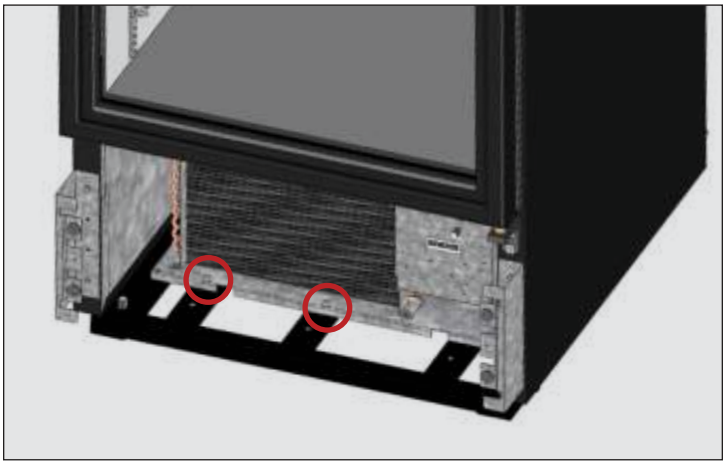

Fig. 6. Remove condenser base bolts.

Maintenance & Servicing (cont.)

Important Warranty Information

If you have any questions, please contact your local TRUE Manufacturing Service Department. See the front cover for locations and contact information.

- Condenser coils accumulate dirt and require cleaning every 30 days or as needed.
- A dirty condenser coil can result in non-warranted repairs and/or appliance failure.
- Proper cleaning involves removing dust from the condenser by using a soft brush, vacuuming the condenser with a shop vac, or using CO_2, nitrogen or pressurized air.
- **DO NOT** place any filter material in front of the condensing coil.
- On most appliances, the condenser is accessible by removing the appliance's outer grill cover.
- If you cannot remove the dirt adequately, please contact your licensed refrigeration service provider.

General Surface Care & Cleaning

⚠ WARNING!	
	Risk of electrical shock or fire! **DO NOT** clean appliance with a pressure washer or hose.
	Slippery Surfaces! Moisture from improper drainage can create slippery surfaces near the appliance. It is your duty to immediately warn your customers of, and dry, the slippery surface. All wet floor areas must be marked with a wet floor sign.
	The appliance owner is responsible for performing a Personal Protective Equipment (PPE) Hazard Assessment and to ensure adequate protection during maintenance and cleaning procedures. **Use appropriate tools**, safety equipment, and PPE during installation and servicing.

Gaskets

- Clean gaskets with warm soapy water.
- **DO NOT** use sharp tools or knives to scrape a gasket.
- Avoid full-strength cleaning products.

Interior

- Clean interior surfaces with a mild solution of baking soda and water to help reduce odor; **DO NOT** use harsh or abrasive cleaners.
- For plastic or powder-coated parts, use warm soapy water to clean **DO NOT** use stainless steel cleaners or similar solvents.

Exterior

- For plastic or powder-coated parts, use warm soapy water to clean **DO NOT** use stainless steel cleaners or similar solvents.
- **DO NOT** clean stainless steel with steel wool or abrasive products. **DO NOT** use detergents or degreasers with chlorides or phosphates. See model-specific manual for more information.

Maintenance & Servicing (cont.)

Stainless Steel Care & Cleaning

USER ACTION

DO NOT use any steel wool, abrasive, or chlorine-based products to clean stainless steel surfaces.

NOTICE!

The use of proprietary names is intended for example only and does not constitute or imply an endorsement. Omission of proprietary cleansers from this list does not imply inadequacy.

Stainless Steel Opponents

There are three basic things which can break down your stainless steel's passivity layer and allow corrosion to form.

- Scratches from wire brushes, scrapers, steel pads, and other items that can be abrasive to stainless steel's surface.
- Deposits left on your stainless steel can leave spots. You may have hard or soft water depending on what part of the country you live in. Hard water can leave spots. Hard water that is heated can leave deposits if left to sit too long. These deposits can cause the passive layer to break down and rust your stainless steel. All deposits left from food prep or service should be removed as soon as possible.
- Chlorides which are present in table salt, food and water, as well as in household and industrial cleaners. These are the worst type of chlorides to use on stainless steel.

Stainless Steel Cleaning and Restoration

- For routine cleaning and removal of grease and oil, apply white vinegar, ammonia, or any good commercial detergent* with a soft cloth or sponge.
- Stainless steel polish (e.g., Zep® Stainless Steel Polish, Weiman® Stainless Steel Cleaner & Polish, Nyco® Stainless Steel Cleaner & Polish, or Ecolab® Ecoshine®) and olive oil can act as a barrier against fingerprints and smears.
- Degreasers* (e.g., Easy-Off® Specialty Kitchen Degreaser or Simple Green® Industrial Cleaner & Degreaser) are excellent for removal of grease, fatty acids, blood and burnt-on foods on all surfaces.

***DO NOT** use detergents or degreasers with chlorides or phosphates.

- For restoration/passivation or removing stubborn stains and discoloration, Brillo® Cameo®, Zud® Cleanser, Ecolab® Specifax™ First Impression® Metal Polish, Sheila Shine, or talc can be applied by rubbing in the direction of the polish lines.

Maintenance & Servicing (cont.)

8 Tips to Help Prevent Rust on Stainless Steel

Maintain the Cleanliness of Your Equipment

Avoid build-up of hard stains by cleaning frequently. Use cleaners at the recommended strength (alkaline chlorinated or non-chloride).

Use the Correct Cleaning Tools

Use non-abrasive tools when cleaning your stainless steel products. The stainless steel's passive layer will not be harmed by soft cloths and plastic scouring pads.

Clean Along Polishing Lines

Polishing lines ("grain") are visible on some stainless steels. Always scrub parallel to polishing lines when visible. Use a plastic scouring pad or soft cloth when you cannot see the grain.

Use Alkaline, Alkaline-Chlorinated or Non-Chloride Cleaners

While many traditional cleaners are loaded with chlorides, the industry is providing an ever increasing choice of non-chloride cleaners. If you are not sure of your cleaner's chloride content, contact your cleaner supplier. If they tell you that your present cleaner contains chlorides, ask if they have an alternative. Avoid cleaners containing quaternary salts, as they can attack stainless steel, causing pitting and rusting.

Rinse

When using chlorinated cleaners, you must rinse and wipe dry immediately. It is better to wipe standing cleaning agents and water as soon as possible. Allow the stainless steel equipment to air dry. Oxygen helps maintain the passivity film on stainless steel.

Never Use Hydrochloric Acid (Muriatic Acid) on Stainless Steel

Even diluted, hydrochloric acid can cause corrosion, pitting and stress corrosion cracking of stainless steel.

Water Treatment

To reduce deposits, soften hard water when possible. Installation of certain filters can remove corrosive and distasteful elements. Salts in a properly maintained water softener can also be to your advantage. Contact a treatment specialist if you are not sure of the proper water treatment.

Regularly Restore & Passivate Stainless Steel

Stainless steel gets its stainless properties from the protective chromium oxides on its surface. If these oxides are removed by scouring, or by reaction with harmful chemicals, then the iron in the steel is exposed and can begin to oxidize, or rust. Passivation is a chemical process that removes free iron and other contaminants from the surface of stainless steel, allowing the protective chromium oxides to re-form.

Maintenance & Servicing (cont.)

Slide Door Removal

USER ACTION

- **DO NOT** use the side latch before removing the slide door. The tension on the door cord is needed to execute these operation instructions.
- Doors **CANNOT** be removed unless they are positioned as stated in these instructions.

1. Position the doors as described below:
   - **Two-Door Appliances** Slide the front door so it is centered on the appliance. See figs. 1 and 2.
   - **Three-Door Appliances** Center the middle door on the left edge of the right door. See fig. 3.
2. After centering, lift the door and tilt the top of the door back until the rollers are out of the top channel. Then, swing the bottom of the door out of the bottom channel. See fig. 4.

Two-Door appliances skip to step 5

3. Slide the right door to the left and align the left edge with the beginning of the TRUE Logo at the top of the door frame (see fig. 5). Then lift the door out of the track as described in step 2 (see fig. 4).

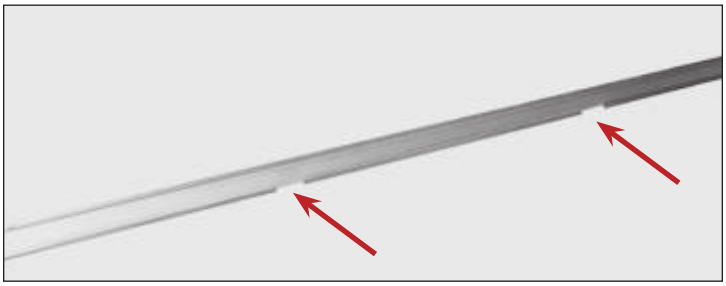

Fig. 1. Door channel openings (two-door appliances ONLY).

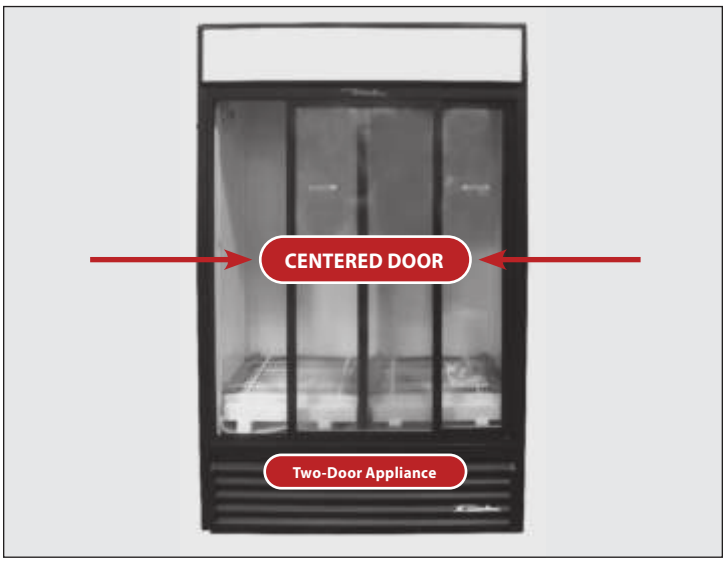

Fig. 2. Position the front door at the center of the appliance.

Fig. 3. Center the middle door on the right door's left edge.

Fig. 4. Carefully remove the door.

Maintenance & Servicing (cont.)

Slide Door Removal (cont.)

4. Slide the left door to the right and align the right edge with the end of the TRUE Logo at the top of the door frame (see fig. 6). Then lift door out of track same way as fig. 4.
5. Remove the door cord from the roller bracket. See figs. 7 and 8.

   NOTICE › The door cord will either be nylon cord or metal cable. The black plastic tab holding the door cord slides out the back.
6. Let the door cord slowly retract back into the door side channel.
7. When reinstalling the door, be sure the door cord grommet attaches to roller slot closest to the pulley. See fig. 9.

Fig. 5. Align the right door's left edge with the TRUE logo's left edge.

Fig. 6. Alight the left door's right edge with the TRUE logo's right edge.

Fig. 7. Remove the door cord from the roller bracket.

Fig. 8. Slide the black tab holding the door cord out the roller bracket's back.

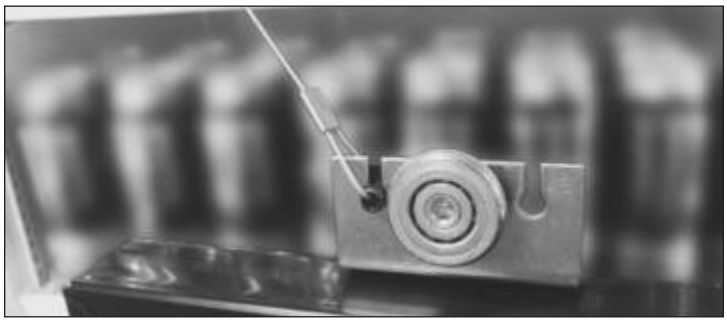

Fig. 9. Be sure the door cord is in the roller slot closest to the pulley.

Maintenance & Servicing (cont.)

Slide Door Adjustment

Only adjust the appliances after it has been installed in its final location and correctly leveled.

Procedure

1. Completely close the slide doors and check for openings. If there are any gaps/openings between the closed doors and appliance, the doors will need to be adjusted.
2. With a 7/16" wrench or adjustable wrench and 1/8" Allen wrench, loosen the roller and move it along the slotted hole. After the adjustment has been made tighten the roller into place. See fig. 1.

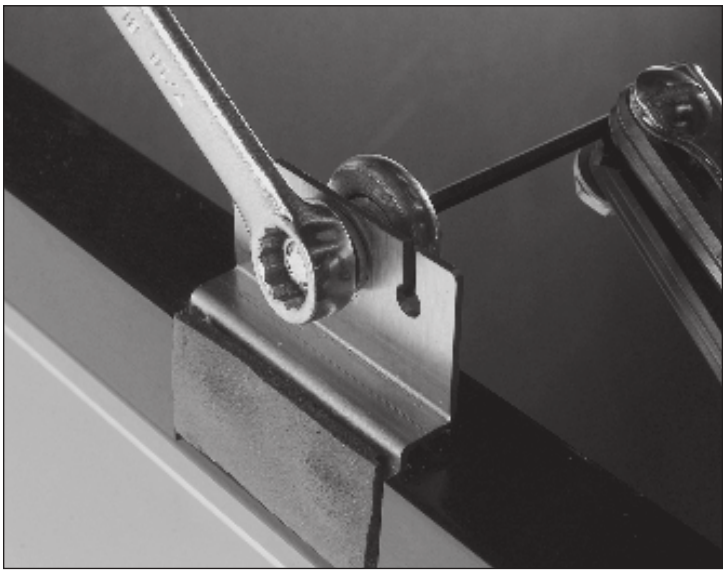

Fig. 1. Adjust the roller.

Slide Door Hold-Open Feature

The hold-open feature keeps the door in the open position.

Procedure

1. Slide the door open.
2. Latch the door in the open position from the back side of door (notch in track). See figs. 1 and 2.

   NOTICE › Figs. 1 and 2 show the rear view of the door and track.

Fig. 1. Door latch is in the open position (engaged with notch).

Fig. 2. Door latch is in the closed position (disengaged from notch).

Warranty Information (USA & Canada Only)

Warranty Information

To view and download the Warranty Information for USA & Canada, please scan the QR code below.

NOTES

NOTES

NOTES

truemfg.com