**TRUE MANUFACTURING CO., INC.**
2001 East Terra Lane • O'Fallon, Missouri 63366-4434
(636) 240-2400 • FAX: (636)-272-2408

International FAX: (636)-272-7546 • (800)-325-6152

Parts Department: (800)-424-TRUE (424-8783)
Parts Department FAX: (636)-272-9471

# INSTALLATION MANUAL

## TBR | TDR SERIES

Original Instructions

**North America – Canada and Caribbean**
**Warranty Phone:** +1 855-878-9277
**Warranty Fax:** +1 636-980-8510
**Warranty Email:** WarrantyInquiries@TrueMfg.com
**Technical Phone:** +1 855-372-1368
**Technical Email:** Service@TrueMfg.com
7:00am–6:00pm CST Monday–Friday,
8:00am–12:00pm Saturday

**Mexico**
**Phone:** +52 555-804-6343/44
Service-MexicoCity@TrueMfg.com
9:00am–5:30pm M–F

**Latin America**
**Phone:** +52 555-804-6343/44
ServiceLatAm@TrueMfg.com
9:00am–5:30pm M–F

**UK, Ireland, Middle East, Africa & India**
**Phone:** +44 (0) 800-783-2049
Service-EMEA@TrueMfg.com
8:30am–5:00pm M–F

**Australia**
**Phone:** +61 2-9618-9999
Service-Aus@TrueMfg.com
8:30am–5:00pm M–F

**European Union & Commonwealth of Independent States**
**Phone:** +49 (0) 7622-6883-0
Service-EMEA@TrueMfg.com
8:00am–5:00pm M–F

*803294-F*

# THANK YOU

FOR YOUR PURCHASE

## Congratulations!

You have just purchased the finest commercial refrigerator available. You can expect many years of trouble-free operation.

## Table of Contents

**Safety Information**
Safety Precautions & Proper Disposal.....3

**Prior to Installation**
Ownership.....4
Cabinet Location.....4
Notice to Customer.....4
Wire Gauge Chart.....4

**Installation**
Uncrating.....5
Cabinet Location.....6
Leveling Leg, 6" Leveling Leg & Castor Installation.....6
Leveling & Sealing the Cabinet to the Floor.....7
Electrical Installation & Safety.....8

**Cabinet Setup**
Shelf Installation.....9
Draft Tower Installation.....10
Draft Spill Tray.....11
Air Distributor Manifold & Distributor Cover.....12
$CO_2$ & Keg Connections.....12
Beer Drain Bottle & Hanger.....13
Access Ports.....13
Overlay Panel Specifications.....15
Overlay Panel Installation.....19

**Cabinet Operation**
Startup, Temperature Control & Light Switch Location.....21
General Sequence of Operation.....22
Draft Beer Storage, Handling & Operation.....23
Draft Beer Problems & Troubleshooting.....24
Changing $CO_2$ Gas Cylinder.....25

**Maintenance, Care, and Cleaning**
Draft Tower Cleaning.....26
Condenser Coil Cleaning.....27
Stainless Steel Care & Cleaning.....29

**Cabinet Adjustments, Servicing & Component Replacement**
Servicing & Replacing Components.....30
Reverse Door Swing.....30
Slide Door Removal.....32
Slide Door Operation.....34
Gasket Replacement.....35
Swing Door Lock & Cam Replacement.....36

**Warranty**
Warranty.....37

## How to Maintain Your True Refrigerator to Receive the Most Efficient and Successful Operation

You have selected one of the finest commercial refrigeration units made. It is manufactured under strict quality controls with only the best quality materials available. Your TRUE cooler, when properly maintained, will give you many years of trouble-free service.

**WARNING** – Use this appliance for its intended purpose as described in this Installation Manual.

# Refrigerant Safety & Warning Information

See the serial label inside the cabinet for the units refrigeration type. For Hydrocarbon Refrigeration (R290 only), see below:

**DANGER** – Risk of fire or explosion. Flammable refrigerant used. **DO NOT** use mechanical devices to defrost refrigerator. **DO NOT** puncture refrigerant tubing; follow handling instructions carefully. To be repaired only by trained service personnel.

**DANGER** – Risk of fire or explosion (flammable refrigerant used), consult repair manual/owner's guide before attempting to service this product. All safety precautions must be followed. Dispose of properly in accordance with local and federal regulations. Follow all safety precautions.

**CAUTION** – Keep all ventilation openings clear of obstruction in the appliance enclosure or in the structure housing the appliance.

# Basic Safety & Warning Precautions

- Take care during operation, maintenance or repairs to avoid cuts or pinching from any part/component of the cabinet.
- Units may pose a tipping hazard while uncrating, during installation, or when moving the unit.
- Ensure the unit is properly installed and located in accordance with the Installation Instructions before use.
- This appliance is not to be used, cleaned or maintained by persons (including children) with reduced physical, sensory or mental capabilities or lack of experience and knowledge, unless they have been given supervision or instruction.
- **DO NOT** allow children to play with the appliance or climb, stand, or hang on the unit's shelves to prevent damage to the refrigerator and personal injury.
- **DO NOT** touch the cold surfaces in the freezer compartment when hands are damp or wet. Skin may stick to these extremely cold surfaces.
- Unplug the refrigerator before cleaning and making repairs.
- Setting temperature controls to the 0 position or powering off an electronic control may not remove power from all components (e.g., light circuits, perimeter heaters, and evaporator fans).
- **DO NOT** store or use gasoline, or other flammable vapors and liquids, in the vicinity of this or any other appliance.
- **DO NOT** store explosive substances such as aerosol cans with a flammable propellant in this appliance.
- Keep fingers out of the "pinch point" areas; clearances between the doors and cabinet are necessarily small; be careful closing doors when children are in the area.
- **DO NOT** use electrical appliances inside the food storage compartments of the units unless the appliances are of the type recommended by the manufacturer.

**NOTE:** All servicing must be performed by a qualified technician.

# Cabinet Disposal Warning

**DANGER!**
**RISK OF CHILD ENTRAPMENT**

## Proper Disposal of the Cabinet

Child entrapment and suffocation are not problems of the past. Junked or abandoned refrigerators are still dangerous, even if they will sit for "just a few days." If you are getting rid of your old refrigerator, please follow the instructions below to help prevent accidents.

**Before throwing away your old refrigerator or freezer:**

- Take off the doors.
- Leave the shelves in place so that children may not easily climb inside.

**DANGER** – Risk of fire or explosion. Flammable insulation and/or refrigerant used. Dispose of all in accordance with local and federal regulations. Follow all safety precautions.

# Prior to Installation

## Ownership

To ensure that your unit works properly from the first day, it must be installed properly. We highly recommend a trained refrigeration mechanic and electrician install your TRUE equipment. The cost of a professional installation is money well spent.

Before you start to install your TRUE unit, carefully inspect it for freight damage. If damage is discovered, immediately file a claim with the delivery freight carrier.

TRUE is not responsible for damage incurred during shipment.

## Cabinet Location

- Appliance tested for IEC to ISO Climate Class 5 [104°F (40°C) temperature, 40% relative humidity].
- For proper operation, ambient temperatures shall not be less than 60°F (15.5°C) and no greater than 104°F (40°C).
- Appliance is not suitable for outdoor use.
- Appliance is not suitable for an area where a pressure washer or hose may be used.
- Ensure the location will provide adequate clearances and sufficient airflow for the cabinet.
- Ensure the power supply for the cabinet matches the cabinet specification sheet or cabinet data plate and is within the rated voltage (+/-5%). Also, that the amp rating of the circuit is correct and that it is properly grounded.
- The cabinet should always be plugged into its own individual dedicated electrical circuit. The use of adapter plugs and extension cords is prohibited.

## Notice to Customer

Loss or spoilage of products in your refrigerator/freezer is **not covered by warranty**. In addition to following recommended installation procedures, you must run the refrigerator/freezer for 24 hours prior to usage to verify its proper operation.

| CLEARANCES | | | |
|---|---|---|---|
| | TOP | SIDES | BACK |
| TBR/TDR | 0" (0 mm) | 0" (0 mm) | 0" (0 mm) |
| **WARNING** – Warranty is void if ventilation is insufficient. | | | |

## Wire Gauge Chart

| 115 Volts | Distance In Feet To Center of Load | | | | | | | | | | | |
|---|---|---|---|---|---|---|---|---|---|---|---|---|
| AMPS | 20 | 30 | 40 | 50 | 60 | 70 | 80 | 90 | 100 | 120 | 140 | 160 |
| 2 | 14 | 14 | 14 | 14 | 14 | 14 | 14 | 14 | 14 | 14 | 14 | 14 |
| 3 | 14 | 14 | 14 | 14 | 14 | 14 | 14 | 14 | 14 | 14 | 14 | 12 |
| 4 | 14 | 14 | 14 | 14 | 14 | 14 | 14 | 14 | 14 | 12 | 12 | 12 |
| 5 | 14 | 14 | 14 | 14 | 14 | 14 | 14 | 12 | 12 | 12 | 10 | 10 |
| 6 | 14 | 14 | 14 | 14 | 14 | 14 | 12 | 12 | 12 | 10 | 10 | 10 |
| 7 | 14 | 14 | 14 | 14 | 14 | 12 | 12 | 12 | 10 | 10 | 10 | 8 |
| 8 | 14 | 14 | 14 | 14 | 12 | 12 | 12 | 10 | 10 | 10 | 8 | 8 |
| 9 | 14 | 14 | 14 | 12 | 12 | 12 | 10 | 10 | 10 | 8 | 8 | 8 |
| 10 | 14 | 14 | 14 | 12 | 12 | 10 | 10 | 10 | 10 | 8 | 8 | 8 |
| 12 | 14 | 14 | 12 | 12 | 10 | 10 | 10 | 8 | 8 | 8 | 8 | 6 |
| 14 | 14 | 14 | 12 | 10 | 10 | 10 | 8 | 8 | 8 | 6 | 6 | 6 |
| 16 | 14 | 12 | 12 | 10 | 10 | 8 | 8 | 8 | 8 | 6 | 6 | 6 |
| 18 | 14 | 12 | 10 | 10 | 8 | 8 | 8 | 8 | 8 | 8 | 8 | 5 |
| 20 | 14 | 12 | 10 | 10 | 8 | 8 | 8 | 6 | 6 | 6 | 5 | 5 |
| 25 | 12 | 10 | 10 | 8 | 8 | 6 | 6 | 6 | 6 | 5 | 4 | 4 |
| 30 | 12 | 10 | 8 | 8 | 6 | 6 | 6 | 6 | 5 | 4 | 4 | 3 |
| 35 | 10 | 10 | 8 | 6 | 6 | 6 | 5 | 5 | 4 | 4 | 3 | 2 |
| 40 | 10 | 8 | 8 | 6 | 6 | 5 | 5 | 4 | 4 | 3 | 2 | 2 |
| 45 | 10 | 8 | 6 | 6 | 6 | 5 | 4 | 4 | 3 | 3 | 2 | 1 |
| 50 | 10 | 8 | 6 | 6 | 5 | 4 | 4 | 3 | 3 | 2 | 1 | 1 |

| 230 Volts | Distance In Feet To Center of Load | | | | | | | | | | | |
|---|---|---|---|---|---|---|---|---|---|---|---|---|
| AMPS | 20 | 30 | 40 | 50 | 60 | 70 | 80 | 90 | 100 | 120 | 140 | 160 |
| 5 | 14 | 14 | 14 | 14 | 14 | 14 | 14 | 14 | 14 | 14 | 14 | 14 |
| 6 | 14 | 14 | 14 | 14 | 14 | 14 | 14 | 14 | 14 | 14 | 14 | 12 |
| 7 | 14 | 14 | 14 | 14 | 14 | 14 | 14 | 14 | 14 | 14 | 12 | 12 |
| 8 | 14 | 14 | 14 | 14 | 14 | 14 | 14 | 14 | 14 | 12 | 12 | 12 |
| 9 | 14 | 14 | 14 | 14 | 14 | 14 | 14 | 14 | 12 | 12 | 12 | 10 |
| 10 | 14 | 14 | 14 | 14 | 14 | 14 | 14 | 12 | 12 | 12 | 10 | 10 |
| 12 | 14 | 14 | 14 | 14 | 14 | 14 | 12 | 12 | 12 | 10 | 10 | 10 |
| 14 | 14 | 14 | 14 | 14 | 14 | 12 | 12 | 12 | 10 | 10 | 10 | 8 |
| 16 | 14 | 14 | 14 | 14 | 12 | 12 | 12 | 10 | 10 | 10 | 8 | 8 |
| 18 | 14 | 14 | 14 | 12 | 12 | 12 | 10 | 10 | 10 | 8 | 8 | 8 |
| 20 | 14 | 14 | 14 | 12 | 10 | 10 | 10 | 10 | 10 | 8 | 8 | 8 |
| 25 | 14 | 14 | 12 | 12 | 10 | 10 | 10 | 10 | 8 | 8 | 6 | 6 |
| 30 | 14 | 12 | 12 | 10 | 10 | 10 | 8 | 8 | 8 | 6 | 6 | 6 |
| 35 | 14 | 12 | 10 | 10 | 10 | 8 | 8 | 8 | 8 | 6 | 6 | 5 |
| 40 | 14 | 12 | 10 | 10 | 8 | 8 | 8 | 6 | 6 | 6 | 5 | 5 |
| 50 | 12 | 10 | 10 | 8 | 6 | 6 | 6 | 6 | 6 | 5 | 4 | 4 |
| 60 | 12 | 10 | 8 | 6 | 6 | 6 | 6 | 6 | 5 | 4 | 4 | 3 |
| 70 | 10 | 10 | 8 | 6 | 6 | 6 | 5 | 5 | 4 | 4 | 2 | 2 |
| 80 | 10 | 8 | 8 | 6 | 6 | 5 | 5 | 4 | 4 | 3 | 2 | 2 |
| 90 | 10 | 8 | 6 | 6 | 5 | 5 | 4 | 4 | 3 | 3 | 1 | 1 |
| 100 | 10 | 8 | 6 | 6 | 5 | 4 | 4 | 3 | 3 | 2 | 1 | 1 |

# Installation

## Uncrating

### Tools Required

- Adjustable wrench
- Phillips screwdriver
- Level

The following procedure is recommended for uncrating the unit:

### Procedure

1. Remove the outer packaging (cardboard and bubbles or styrofoam corners and clear plastic). See fig. 1. Inspect for concealed damage. Again, immediately file a claim with the freight carrier if there is damage.

   **NOTE:** Move the unit as close as possible to the final location before removing the wooden skid.

2. With an adjustable wrench, remove all shipping bolts securing the wood skid to the bottom of the cabinet. See fig. 2.

   **NOTE:** Some models may require removing the front and/or rear grill to access the shipping bolts.

3. If leveling legs or castors **will not be used**, remove the cabinet from the wood skid and set the skid aside.

   **NOTE: DO NOT** lift the cabinet by the countertops, doors, drawers, or grills.

   If leveling legs or castors **will be used**, rotate the cabinet on the skid (see fig. 3) and see the installation instructions on the next page.

**NOTE:** Remember to leave cabinet upright for 24 hours before plugging into a power source. Keys for cabinet with door locks are located in the warranty packet.

**WARNING** – Units may pose a tipping hazard while uncrating, during installation, or when moving the unit.

***Fig. 1.*** Remove the exterior packaging.

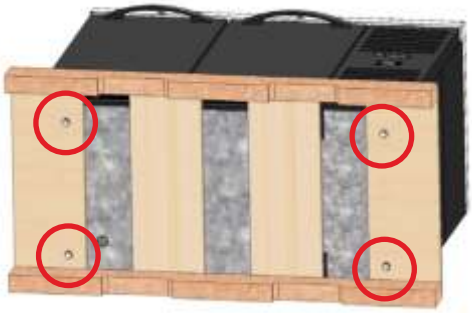

***Fig. 2.*** Shipping bolt locations.

***Fig. 3.*** When lifting unit, do not use countertops, doors/drawers, or grills as a lifting point.

# Installation (cont.)

## Cabinet Location

1. Ensure that the drain hose or hoses are positioned in the pan.
2. Free the plug and cord from inside the lower rear of the cooler (**DO NOT** plug in).
3. Place the unit close enough to the electrical supply so that the extension cords are never used.

## Leveling Leg, 6" Leveling Leg, or Castor Installation

Leveling legs are provided to assist with leveling the cabinet.

Adjustable legs will provide 6" (152 mm) of clearance under the cabinet. Castors provide cabinet mobility.

**NOTE: If the cabinet has a center leveling screw, castor, or leg, make sure it is adjusted properly so it makes full contact with the floor after the cabinet has been leveled.**

### Required Tools

Required tools include (but may not be limited to) the following:

Adjustable Wrench

### Procedure: Leveling Legs

With access to the bottom of the cabinet, thread the leveling legs into the holes used to secure the cabinet to the skid. See figs. 1 and 2.

### Procedure: 6" (152 mm) Leveling Legs

1. Access the bottom of the cabinet and thread the leveling legs into the rail. See figs. 3 and 4.
2. Verify that the cabinet is level.
3. If the cabinet is not level, gently lift and support the low end of the cabinet. With an adjustable wrench, screw the bottom stem of the leveling leg in or out to level and support the cabinet. See fig. 5.

### Procedure: Castors

1. Locate the castor anchor points on the underside of the cabinet.
2. With an adjustable wrench and the provided hardware, install the plate castors.

   **NOTE: DO NOT** overtighten the bolts.
3. Verify the level of the cabinet. If the cabinet is not level, gently lift and support the low end of the cabinet and add castor shims.
   - **a.** Loosen the castor bolts to create space between the mounting plate and the bottom of the cabinet. See fig. 6a.
   - **b.** Position the castor shims and tighten the castor bolts. See figs. 6b and 6c.
   - **c.** Lower the cabinet and verify it is level. Repeat the process until the cabinet is level.

   **NOTE:** Install shims in pairs and ensure the shims contact the castor mounting bolts.

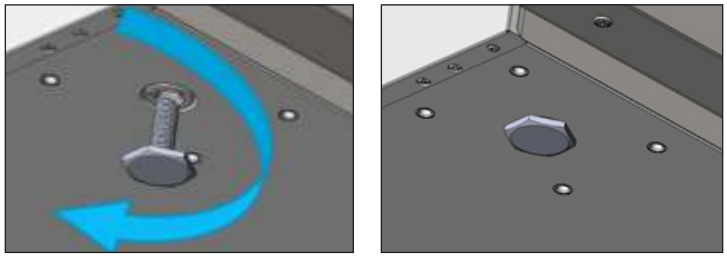

***Fig. 1.*** Turn the leveling legs clockwise to lower the unit.

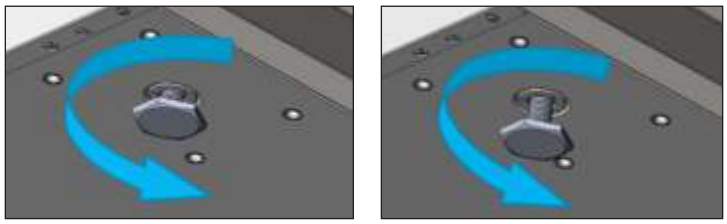

***Fig. 2.*** Turn the leveling legs counterclockwise to raise the unit.

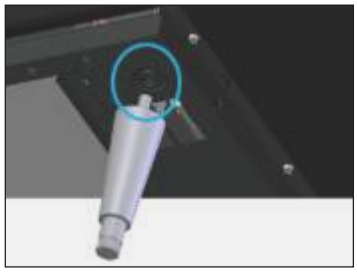

***Fig. 3.*** Locate the threaded hole in the rail.

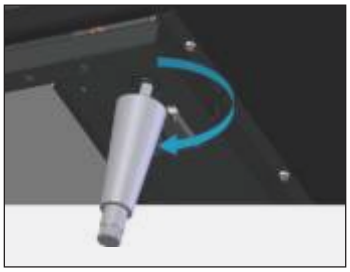

***Fig. 4.*** Screw in the leveling legs.

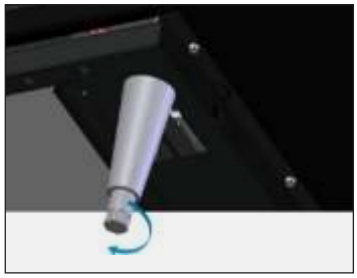

***Fig. 5.*** Turn the bottom stem to level the cabinet.

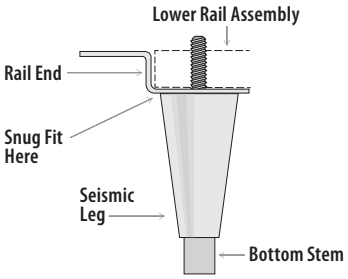

# Installation (cont.)

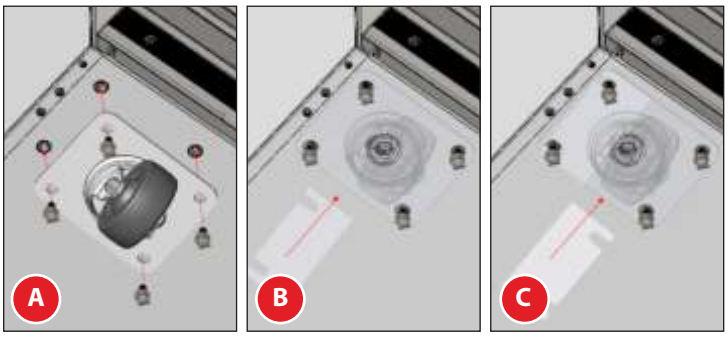


***Fig. 6.*** Install castor shims in pairs.

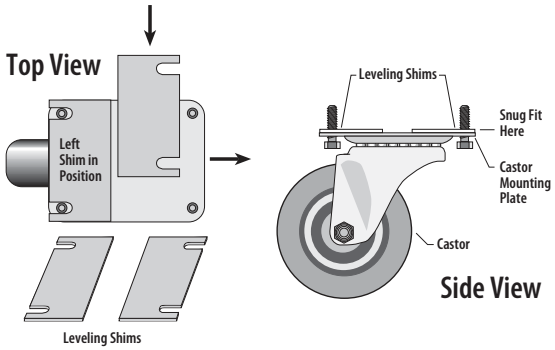


## Leveling

Proper leveling of your TRUE cooler is critical to operating success (for non-mobile models). Leveling impacts effective condensate removal and door operation.

### Procedure

Level the unit front-to-back and side-to-side.

1. Position the level on the inside floor of the unit near the doors (the level should be parallel to cabinet front). Level the cabinet.
2. Position the level at the inside rear of cabinet (again, the level should be placed parallel to cabinet back). Level the cabinet.
3. Perform procedures similar to steps 1 and 2 by placing the level on inside floor (left and right side, parallel to the depth of the cooler). Level the cabinet.

**NOTE:** If the cabinet has a center leveling screw, castor, or leg, make sure it is adjusted properly so it makes full contact with the floor after the cabinet has been leveled.

## Sealing the Cabinet to the Floor

Asphalt floors are susceptible to chemical attack. A layer of tape may be placed on the floor prior to applying the sealant to protect the floor.

### Procedure

1. Position the cabinet, allowing 3" (73 mm) between the wall and the rear of the cabinet to ensure proper ventilation.
2. Level the cabinet. The cabinet should be level side-to-side and front-to-back. To check that the cabinet is level, place a carpenter's level on the interior cabinet floor in four places:
   - **a.** Position the level on the inside floor of the cabinet, near the doors (the level should be placed parallel to the cabinet front). Level the cabinet.
   - **b.** Position the level at the inside rear of the cabinet (the level should be placed parallel to the cabinet back). Level the cabinet.
   - **c.** Perform procedures similar to a and b by placing the level on the left and right inside floor (level should be parallel to the cabinet sides). Level the cabinet.
3. Draw an outline of the cooler base on the floor.
4. Raise and block the front side of the cabinet.
5. Apply a bead of NSF-approved sealant (see list below) to the floor, 1/2" (13 mm) inside the front part of the outline drawn in step 4. The bead of sealant must be heavy enough to seal the entire cabinet surface when the cabinet is lowered on top of the sealant.
6. Raise and block the rear of the cabinet.
7. Apply sealant to the floor on the other three sides, as outlined in step 5.
8. Examine the the cabinet to ensure that it is sealed to the floor around the entire perimeter.

### NSF-Approved Sealants

- 3M #ECU800 Caulk
- 3M #ECU2185 Caulk
- 3M #ECU1055 Bead
- 3M #ECU1202 Bead
- Armstrong Cork – Rubber Caulk
- Products Research Co. #5000 Rubber Caulk
- G.E. Silicone Sealer
- Dow Corning Silicone Sealer

# Installation (cont.)

## Electrical Installation & Safety

### Use of Adapter Plugs

**NEVER USE AN ADAPTER PLUG!** An adapter plug alters the original OEM plug configuration when connecting it to a power source.

TRUE will not warranty any refrigerator/freezer that has been connected to an adapter plug.

### Use of Extension Cords

**NEVER USE AN EXTENSION CORD!** An extension cord is determined to be any component that adds length to the original OEM power cord when connecting it to a power source.

TRUE will not warranty any refrigerator/freezer that has been connected to an extension cord.

### NEMA Plug Configurations
**60 HZ USE ONLY!**

TRUE uses these types of NEMA plugs shown. If you **DO NOT** have the proper outlet, have a licensed electrician verify and install the correct power source.

### International (IEC) Plugs Only

International cabinets may be supplied with a power cord that will require installation. Install this cord before connecting the unit to a power source.

**NOTE:** International plug configurations will vary by country and voltage

#### *Installation*

Fully seat the power cord into the cabinet receptacle until it locks in position. See fig. 1.

#### *Removal*

Depress the red button. See fig. 2.

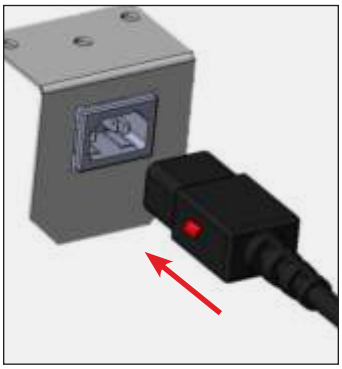

***Fig. 1.*** Fully insert the power cord into the receptacle.

***Fig. 2.*** Push the red button to remove the plug.

### How to Connect Electricity

- The power cord from this appliance is equipped with a grounding plug which minimizes the possibility of electric shock hazard.
- The wall outlet and circuit should be checked by a licensed electrician to make sure the outlet is properly grounded.
- If the outlet is a standard 2-prong outlet, it is your personal responsibility and obligation to have it replaced with the properly grounded wall outlet.
- **DO NOT**, under any circumstances, cut or remove the ground prong from the power cord. For personal safety, this appliance must be properly grounded.
- Before your new unit is connected to a power supply, check the incoming voltage with a voltmeter. If the recorded voltage is less than the rated voltage for operation (+/-5%) and amp rating, correct immediately. Refer to cabinet data plate for this voltage requirement.
- The refrigerator/freezer should always be plugged into a dedicated electrical circuit. This provides the best performance and prevents building wiring circuits from being overloaded, which could cause a fire hazard from overheated wires.
- Never unplug your refrigerator/freezer by pulling on the power cord. Always grip plug firmly and pull straight out from the outlet.
- When moving the refrigerator/freezer, for any reason, be careful not to roll over or damage the power cord.
- Repair or replace immediately all power cords that have become frayed or otherwise damaged. **DO NOT** use a power cord that shows cracks or abrasion damage along its length or at either end.
- If the supply power cord is damaged, it should be replaced with original equipment manufacturer (OEM) components. To avoid hazard this should be done by a licensed service provider.

### Cabinet Wiring Diagram

The cabinet's wiring diagram is in the exterior servicing compartment space of the cabinet.

A copy of the wiring diagram may also be obtained at **www. truemfg.com/support/serial-number-lookup**

# Cabinet Setup

## Shelf Installation

### Procedure

1. Hook the shelf clips into the shelf standards. See fig. 1.
2. Push up on the bottom of the clip. See fig. 2.

   **NOTE:** You may need to squeeze or twist the bottom of the shelf clip for proper installation. Position all four shelf clips equal in distance from the floor for flat shelves.
3. Ensure the shelf clip is not loose or able to wiggle out of the shelf standard. See figs. 3 and 4.
4. Place the shelves on the shelf clips with the cross support bars facing down.

   **NOTE:** Be sure all shelf corners are properly seated.

### Installation Tips

- Install **all** the shelf clips before installing any shelves.
- Start at the bottom shelf and work your way up.
- Always lay the back of each shelf down on the rear clips before the front.

**WARNING** – **DO NOT** use pliers or any crimping tools when installing shelf clips. Altering shelf clips in any way can lead to shelving instability.

### Shelf Adjustment

Shelving is adjustable for customer application. This cabinet meets the IEC Shelf Weight Capacity of 47lb/ft$^2$ (230kg/m$^2$).

***Fig. 1.*** Installing top tab of shelf clip.

***Fig. 2.*** The bottom tab of the shelf clip will fit tightly

***Fig. 3.*** You may need to squeeze or twist the bottom of the shelf clip to install.

***Fig. 4.*** Installed shelf clip..

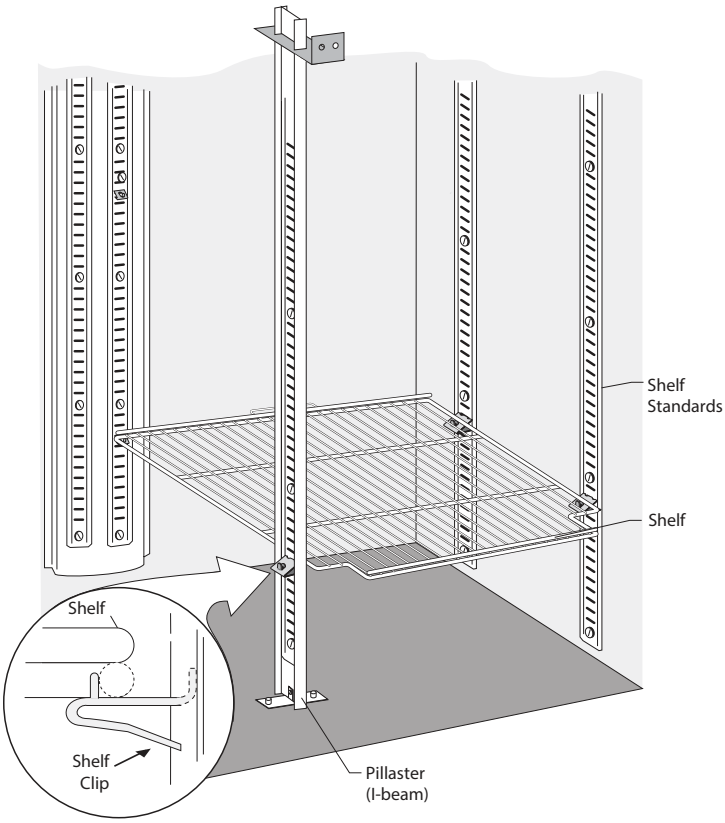

# Cabinet Setup (cont.)

## Draft Tower Installation

### Procedure

1. Position the rubber washer (see fig. 1) over the mounting holes in the cabinet countertop.
2. Thread the beer line connector (see fig. 2) to the draft arm. See fig. 3.
3. Run the beer line through the hole and into the cabinet. See fig. 4.
4. With the provided hardware, install the draft arm. See figs. 5 and 6.
5. Remove the top of the draft arm. See fig. 7a.
6. Insert the air hose [1" (25.4mm) plastic tube] into the draft arm. See fig. 7b.

   **NOTE:** Take care to not disturb the insulation.
7. Hook the air hose clip to the insulating sleeve at the top of the draft arm. See fig. 8.

   **NOTE:** The clip ensures the chill hose, which keeps the beer faucet cold, remains correctly positioned.
8. Replace the top of the draft arm.

***Fig. 1.*** Draft arm components; draft arm not shown.

***Fig. 2.*** Be sure to insert the O-ring into the beer line connector.

***Fig. 3.*** Attach the beer line connector to the draft arm.

***Fig. 4.*** Run the line into the cabinet.

***Fig. 5.*** Ensure the rubber gasket is between the countertop and draft arm.

***Fig. 6.*** Thread the handle onto the beer draft arm.

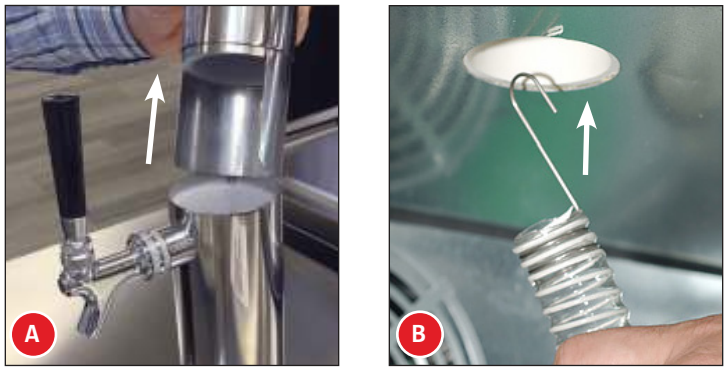


***Fig. 7.*** Route the air hose through the draft tower from below.

***Fig. 8.*** Hang the chill hose clip over the beer line.

# Cabinet Setup (cont.)

| Parts Key | |
|---|---|
| A | Spill Tray Grate |
| B | Spill Tray |
| C | Tray Gasket |
| D | Spill Tray Access Port |

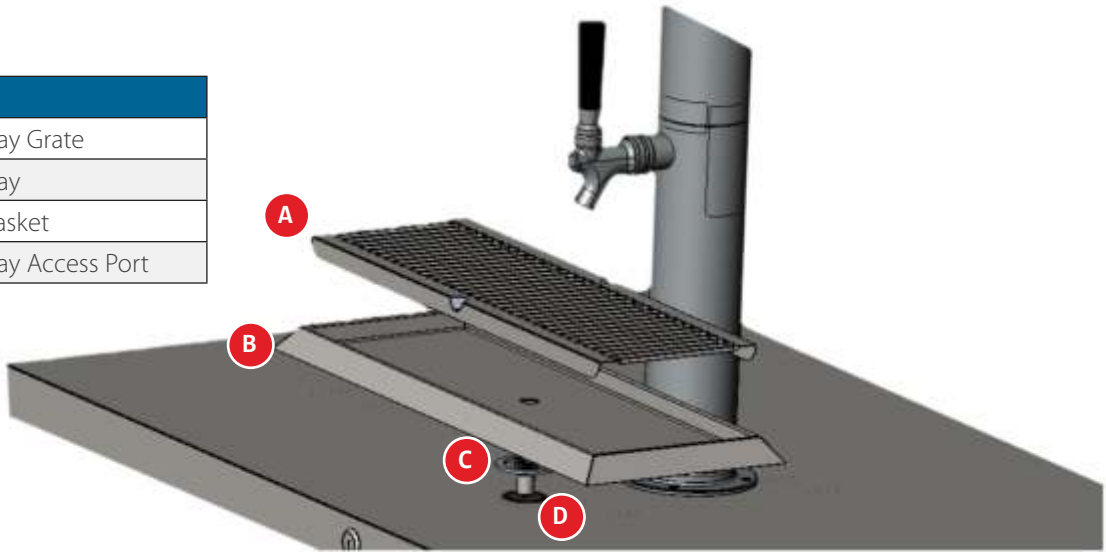


## Draft Spill Tray

### Procedure

1. Place the tray gasket over the spill tray tube.
2. Slide the spill tray tube into the spill tray access port.
3. Carefully position the spill tray on the countertop.
4. From the inside of the cabinet, thread the spill tray tube nut onto the tube securing the spill tray to the countertop. See figs. 1–3.

   **NOTE:** Hand tighten only.
5. Place the spill tray grate into the spill tray.
6. Place a 3/4" (19 mm) i.d. hose onto the spill tray tube.
7. With the draft spill tray positioned and secured, apply a bead of RTV Silicone (provided) to seal the spill tray to the countertop. See fig. 4.

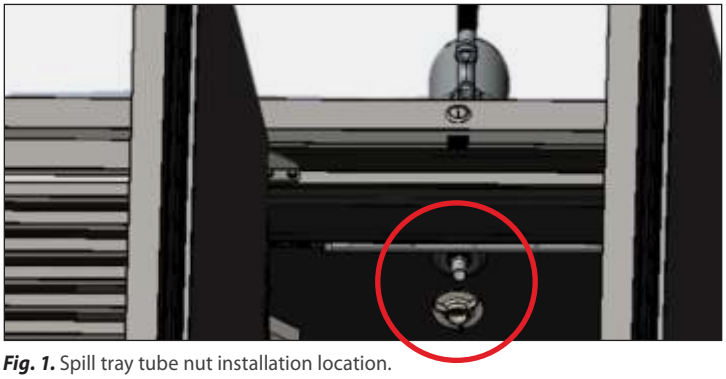

***Fig. 1.*** Spill tray tube nut installation location.

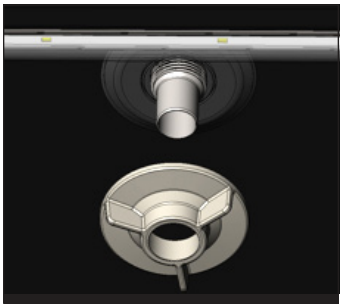

***Fig. 2.*** Thread the spill tray tube nut.

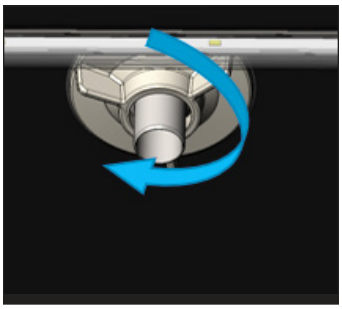

***Fig. 3.*** Hand-tighten only.

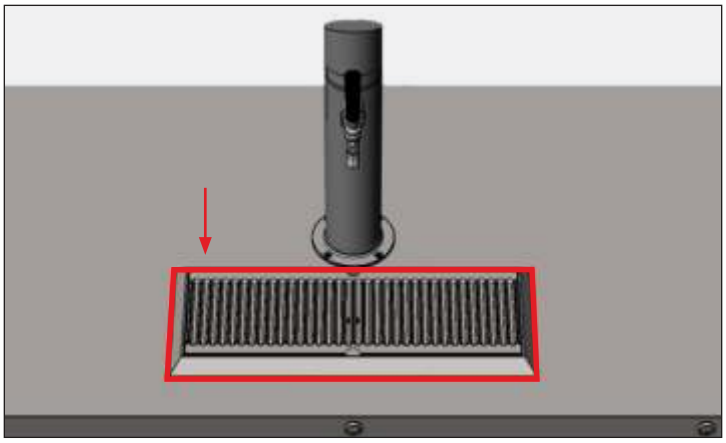

***Fig. 4.*** Apply silicone around the spill tray.

# Cabinet Setup (cont.)

## Air Distributor Manifold & Distributor Cover

A 2-way air distributor manifold is included to allow a single $CO_2$ supply line to pressurize two kegs. The air distributor is located behind the distributor cover. To access, lift the cover off the manifold mounting bracket. See figs. 1 and 2.

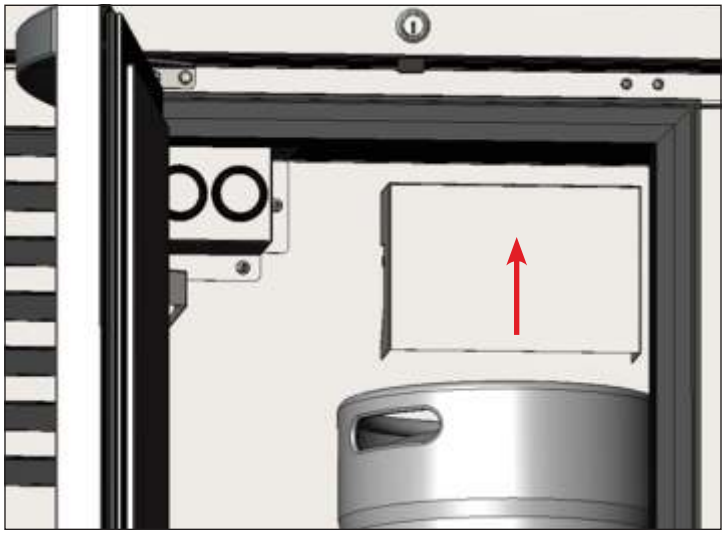

***Fig. 1.*** Llft the distributor cover.

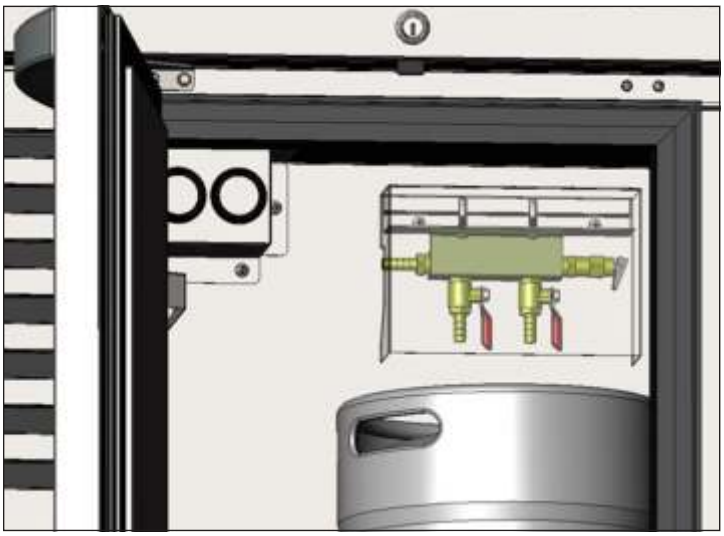

***Fig. 2.*** The 2-way distributor manifold.

**WARNING** – Contents under pressure. Take care when handling filled $CO_2$ tanks. If unfamiliar with using $CO_2$ tanks and/or regulators, seek information from your local distributor or brewer representative before proceeding.

## $CO_2$ & Keg Connections

**NOTE:** $CO_2$ cylinders, regulators, and keg tappers are not provided by TRUE.

### Required Tools

Required tools include (but may not be limited to) the following:

- $CO_2$ Cylinder
- Pressure Regulator
- Tapper

**NOTE:** Be sure to use hose clamps for all air and beer lines as applicable.

### Procedure

1. Attach a pressure regulator to your $CO_2$ cylinder.
2. Connect the pressure regulator to the distributor manifold.
3. Connect the distributor manifold to your tapper(s).
4. Connect the draft tower beer line(s) to your tapper(s).
5. Attach the tapper(s) to your keg(s).
6. Open the pressure regulator valve and pressurize the system.

   **NOTE:** It requires 1/2 lb (0.23 kg) of $CO_2$ to dispense a half-barrel of beer at 38˚F (3.3˚C) with 15 psi (1.03 bar) of pressure on the barrel.
7. Engage your tapper(s)
8. Check all connection points for leaks. If the system leaks, verify all fittings and clamps are tight and seal correctly.

# Cabinet Setup (cont.)

## Beer Drain Bottle & Hanger

An optional beer drain bottle and hanger may be purchased to collect the overflow from the draft spill tray. The bottle hanger slides over the top of the beer keg. See fig. 3.

Route a 3/4" (19 mm) I.D. vinyl hose from the spill tray tube into the drain bottle. Empty the bottle as determined by usage.

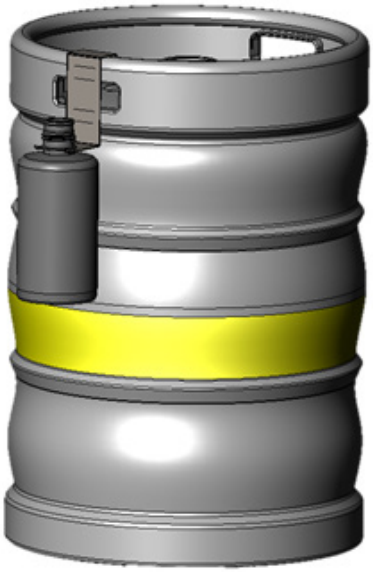

***Fig. 3.*** Drain bottle and hanger on keg.

## Access Ports

Access ports provide optional locations to route external beer lines, $CO_2$ lines, or overflow beer spill tray drain lines.

Carefully drill through the access port's inner and outer sleeves. Once the lines have been routed, seal around the line with food grade silicone.

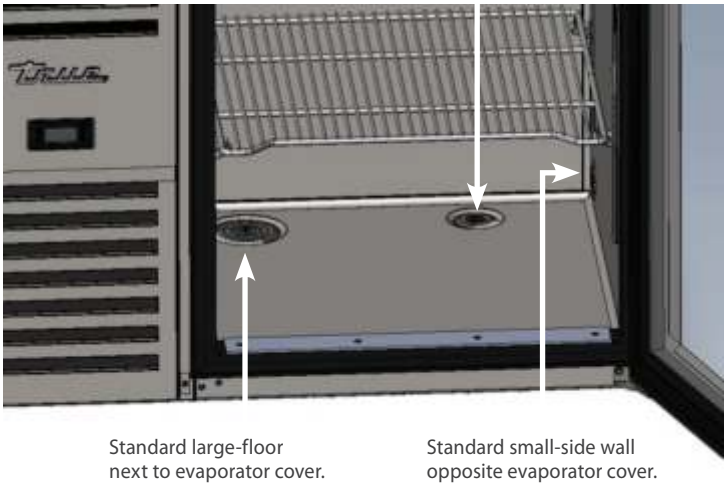

# Cabinet Setup (cont.)

## Access Ports (cont.)

# DRILL ZONES* – No drilling allowed on any face with doors!

Access ports are available for purchase to plug drilled holes.

*Applies to all sizes. 3-door model shown.

**NO DRILLING ALLOWED**
Mirror dimensions for right-hand cooling systems

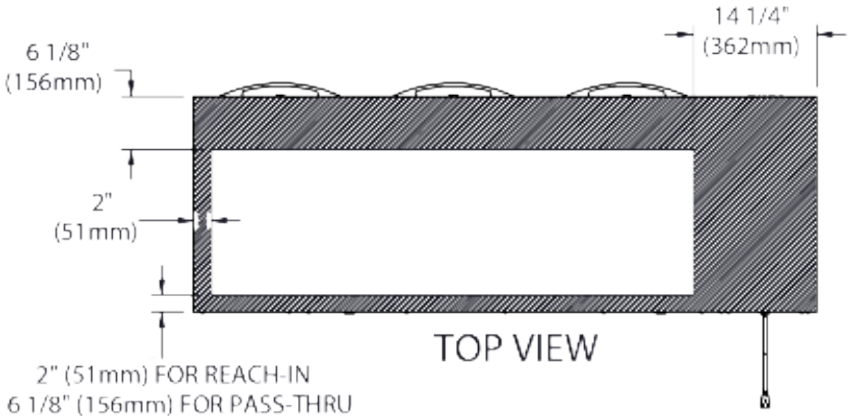


TOP VIEW

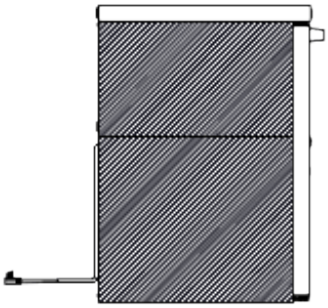

CONDENSING UNIT SIDE VIEW

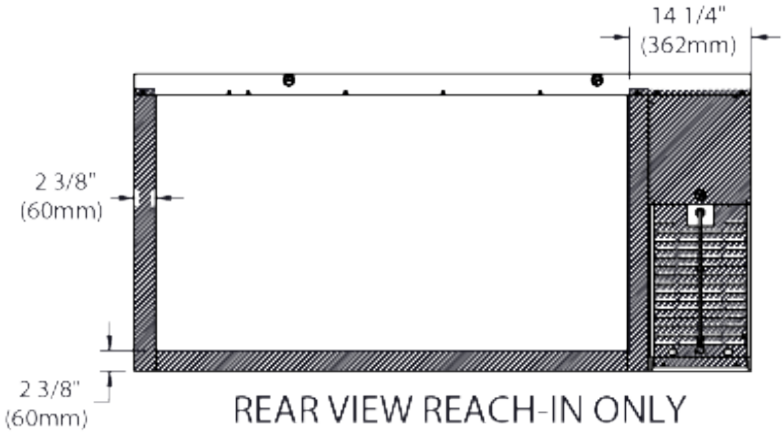


REAR VIEW REACH-IN ONLY

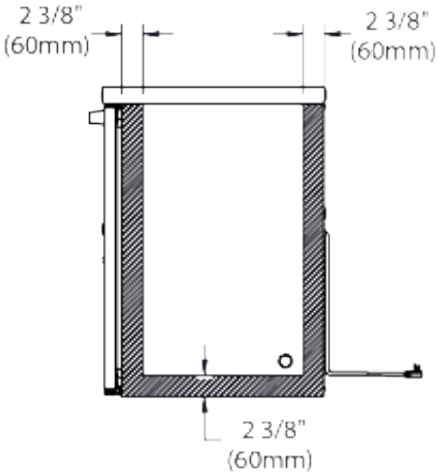


NON-CONDENSING UNIT SIDE VIEW

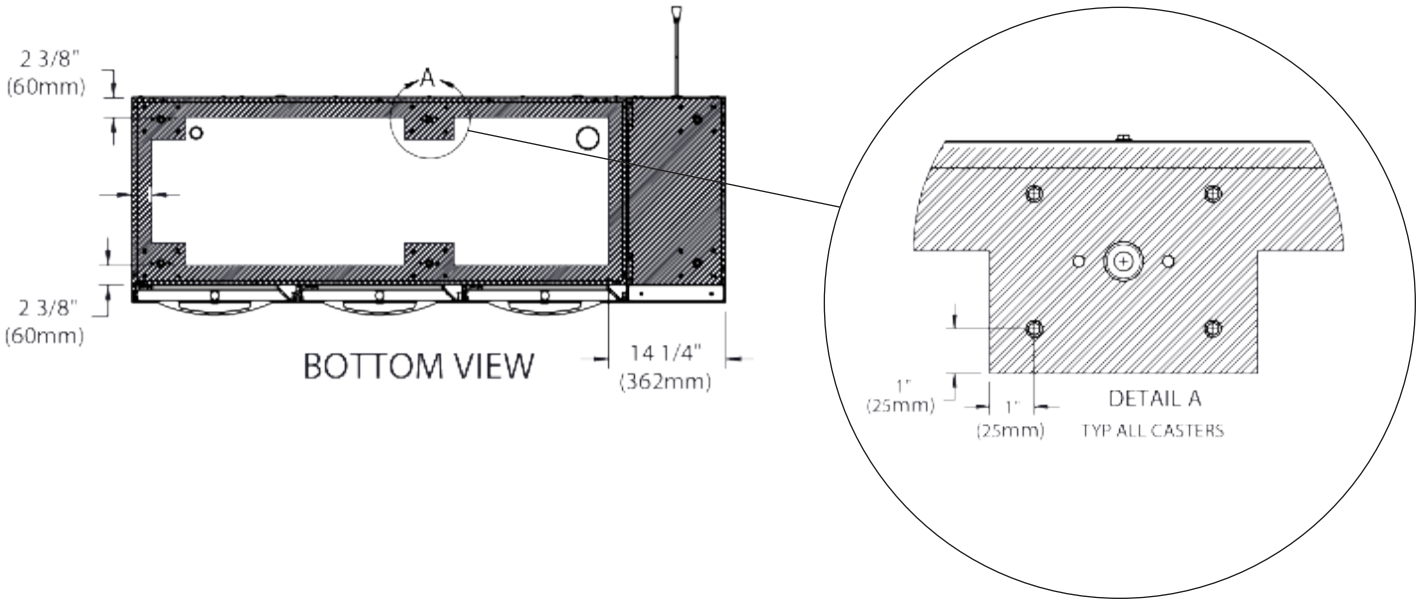


BOTTOM VIEW

# Cabinet Setup (cont.)

## Overlay Panel Specifications

For panel installation instructions, see "Overlay Panel Installation" on page 19.

### Slotted Grill

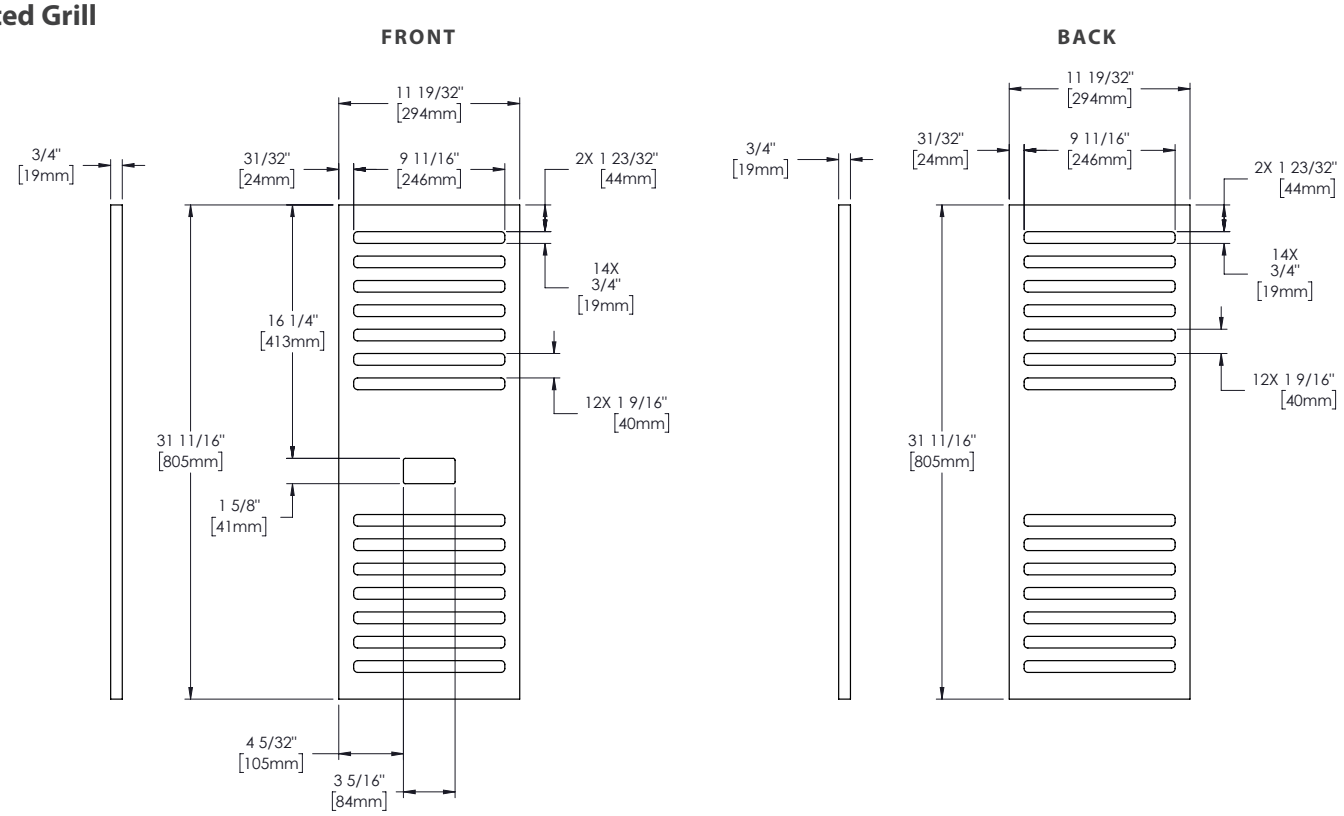


### Grill with Holes

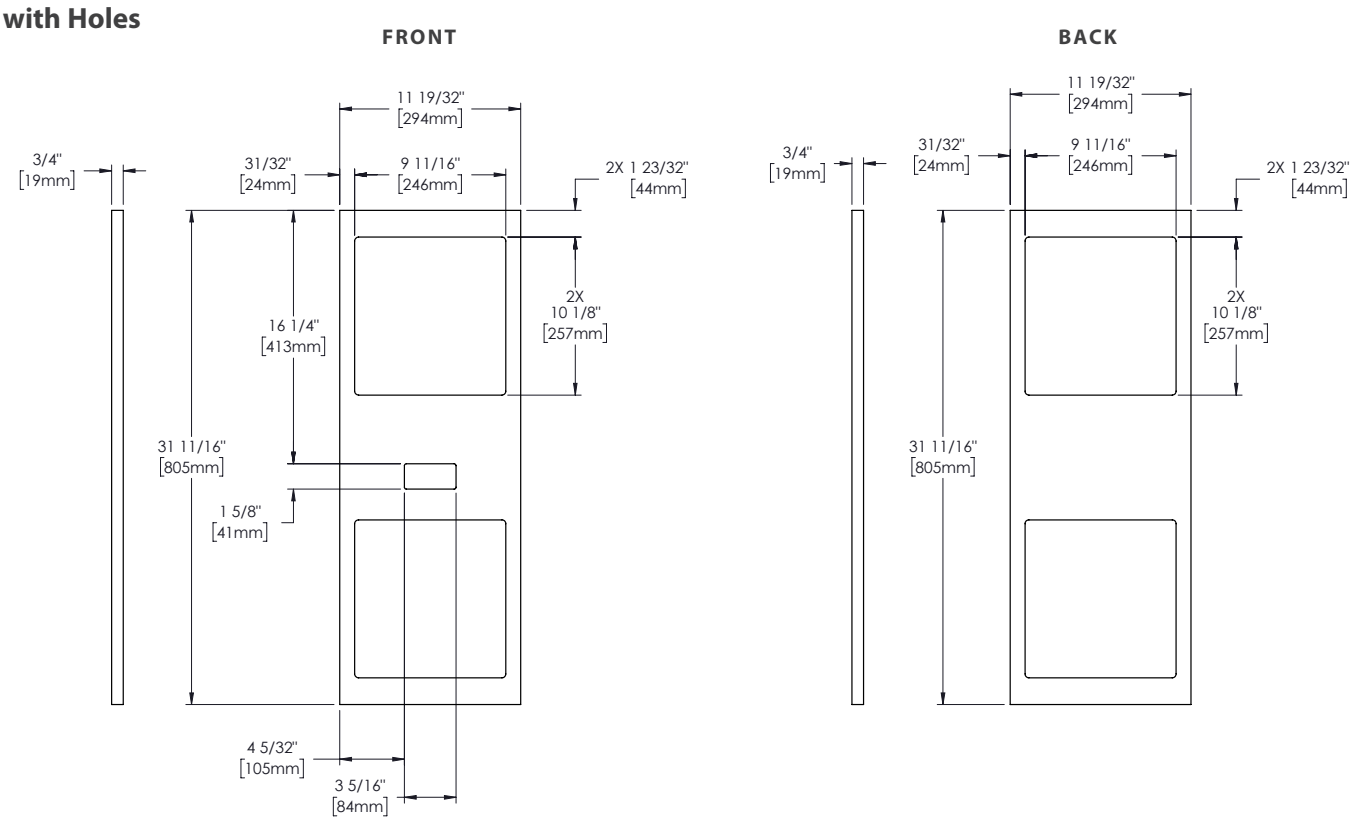

# Cabinet Setup (cont.)

## Overlay Panel Specifications (cont.)

For panel installation instructions, see "Overlay Panel Installation" on page 19.

## TBR | TDR–48

| Glass Door Panel Specifications | |
|---|---|
| Width | 17-5/8" (448 mm) |
| Height | 31-11/16" (805 mm) |
| Depth | 3/4" (19 mm) |
| Weight | 15 lb (6.8 kg) max |
| Rail Style Dimension | 2" (50.8 mm) max |
| Viewable Area Height | 25-11/16" (652 mm) |
| Viewable Area Width | 11-5/8" (295 mm) |

| Solid Door Panel Specifications | |
|---|---|
| Width | 17-5/8" (448 mm) |
| Height | 31-11/16" (805 mm) |
| Depth | 3/4" (19 mm) |
| Weight | 15 lb (6.8 kg) max |
| Rail Style Dimension | 2" (50.8 mm) max |

GLASS DOOR

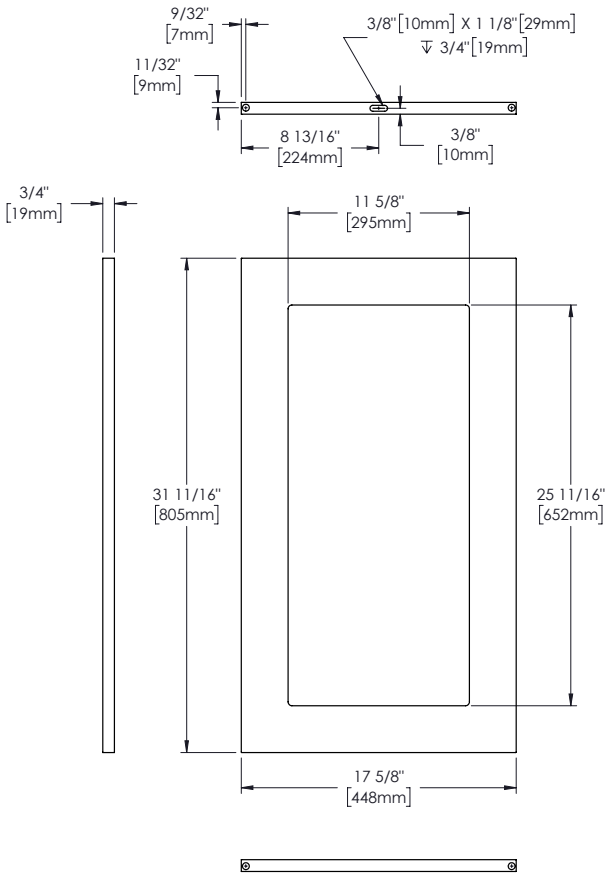


SOLID DOOR

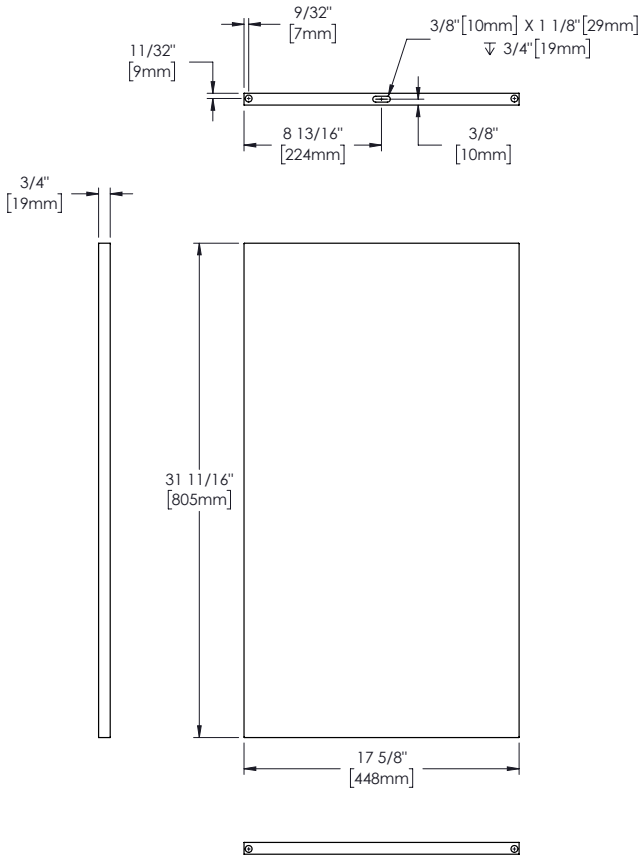

# Cabinet Setup (cont.)

## Overlay Panel Specifications (cont.)

For panel installation instructions, see "Overlay Panel Installation" on page 19.

## TBR | TDR–32/52/72/92

| Glass Door Panel Specifications | |
|---|---|
| Width | 19-5/8" (498 mm) |
| Height | 31-11/16" (805 mm) |
| Depth | 3/4" (19 mm) |
| Weight | 15 lb (6.8 kg) max |
| Rail Style Dimension | 2" (50.8 mm) max |
| Viewable Area Height | 25-11/16" (652 mm) |
| Viewable Area Width | 13-5/8" (346 mm) |

| Solid Door Panel Specifications | |
|---|---|
| Width | 19-5/8" (498 mm) |
| Height | 31-11/16" (805 mm) |
| Depth | 3/4" (19 mm) |
| Weight | 15 lb (6.8 kg) max |
| Rail Style Dimension | 2" (50.8 mm) max |

GLASS DOOR

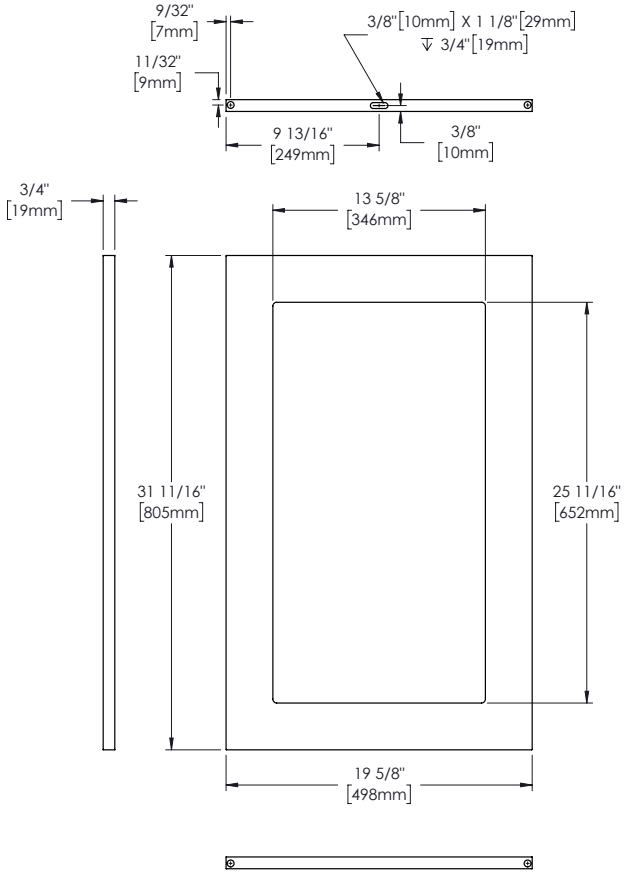


SOLID DOOR

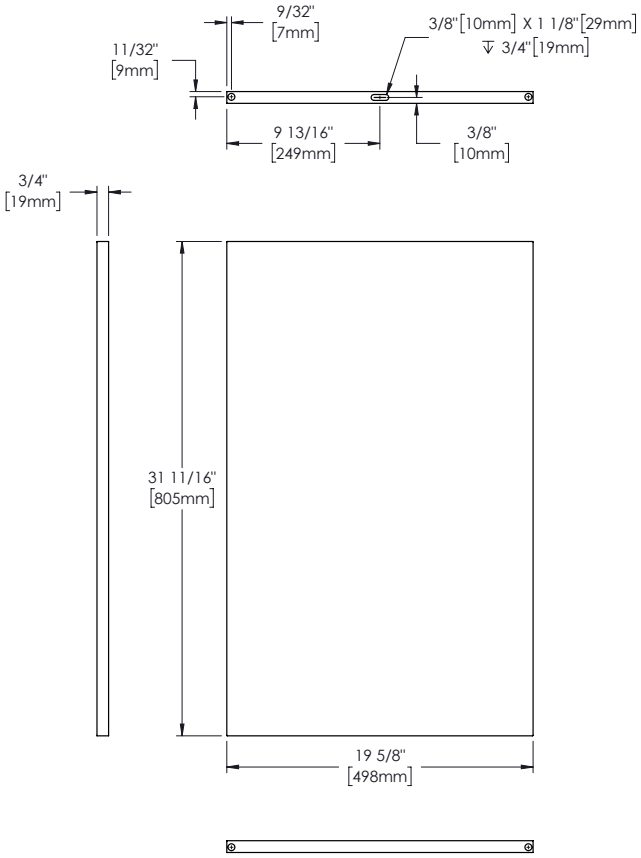

# Cabinet Setup (cont.)

## Overlay Panel Specifications (cont.)

For panel installation instructions, see "Overlay Panel Installation" on page 19.

## TBR | TDR–36/60/84/108

| Glass Door Panel Specifications | |
|---|---|
| Width | 23-5/8" (600 mm) |
| Height | 31-11/16" (805 mm) |
| Depth | 3/4" (19 mm) |
| Weight | 15 lb (6.8 kg) max |
| Rail Style Dimension | 2" (50.8 mm) max |
| Viewable Area Height | 25-11/16" (652 mm) |
| Viewable Area Width | 17-5/8" (448 mm) |

| Solid Door Panel Specifications | |
|---|---|
| Width | 23-5/8" (600 mm) |
| Height | 31-11/16" (805 mm) |
| Depth | 3/4" (19 mm) |
| Weight | 15 lb (6.8 kg) max |
| Rail Style Dimension | 2" (50.8 mm) max |

GLASS DOOR

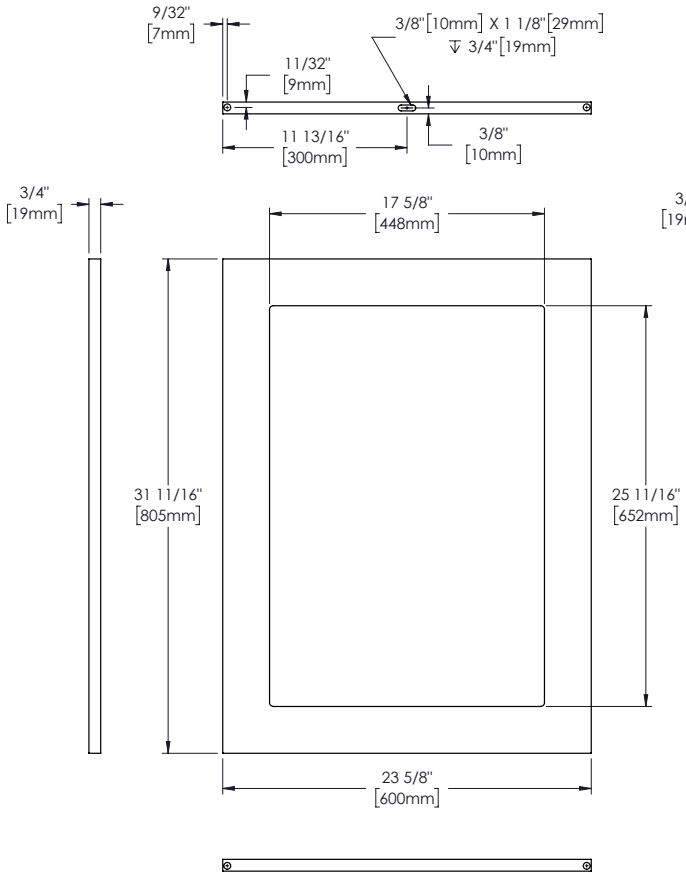


SOLID DOOR

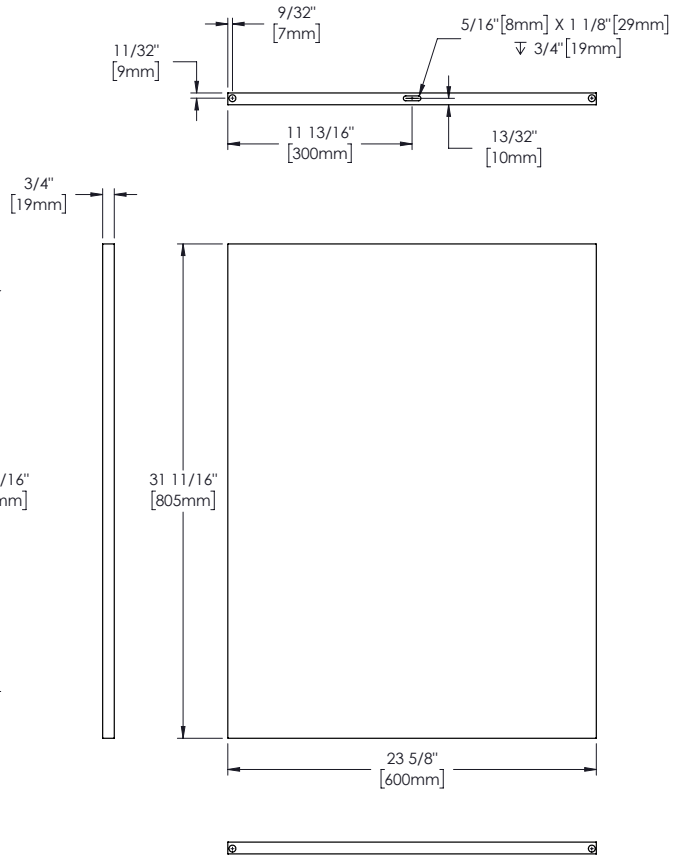

# Cabinet Setup (cont.)

## Overlay Panel Installation

Overlay units are custom order.

### Required Tool(s)

- Surface Protection*
- Phillips Screwdriver
- 2+ Clamps [≥2" (50.8 mm)]
- 5/16" Socketwrench
- 5/8" (15.8751 mm) Screws**
- Tape Measure
- Marking Utensil
- Tape
- 3/8" Drill Bit
- 17/64" Drill Bit
- Drill

*Cardboard, moving blanket, foam padding, etc.
**Required quantities vary by application. Be sure the screws are shorter than the panel thickness.

**TAKE CARE TO NOT DAMAGE THE PANEL FINISH!**

This instruction demonstrates using cardboard from the unit's exterior packaging for surface protection.

Recommended panel thickness is 3/4" (19.05 mm).

### Grill Overlay Installation

### Procedure

1. Carefully lay the grill overlay panel facedown on a protected surface.
2. With a Phillips screwdriver, remove the cabinet grill. See fig. 1.
3. Place the grill facedown on the overlay panel. Then, center the grill and overlay. See fig. 2.

   **NOTE:** Center the cabinet grill and overlay panel at the corners.
4. Clamp the grill and overlay. See fig. 2.

   **NOTE:** If the clamp jaws are not padded, insert padding between the clamp and the overlay to protect the panel's finish.
5. Fasten the overlay to the grill. See fig. 3.

   **NOTE:** Be sure the mounting screws are shorter than the overlay panel thickness.
6. Remove the clamps, and then reinstall the grill.

### Glass & Solid Door Overlay Installation

### Procedure

1. Carefully lay the door overlay panel facedown on a protected surface.
2. With a 5/16" socketwrench, remove the cabinet door. See fig. 4.
3. Remove the door gasket, top hinge pin & bushing (fig. 5a), and door cam riser (fig. 5b).
4. Place the door facedown on the overlay. Then, center the door and overlay. See fig. 6.

   **NOTE:** Center the door and overlay panel at the corners.

***Fig. 1.*** Pull the top of the cover forward and then lift.

***Fig. 2.*** Center the overlay and grill at the corners. The panel is slightly larger than the grill.

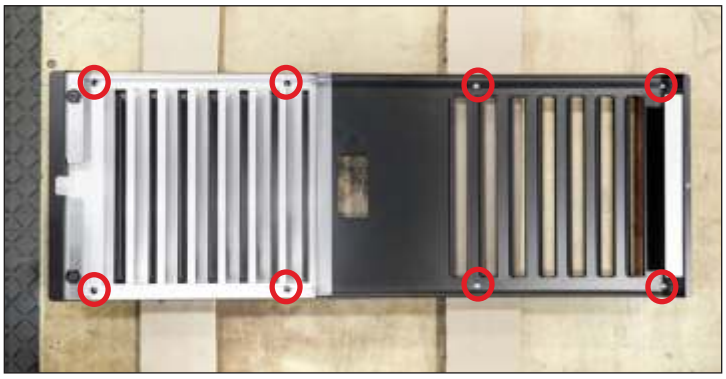

***Fig. 3.*** Cabinet grill predrilled hole locations.

***Fig. 4.*** Carefully remove the door from the unit.

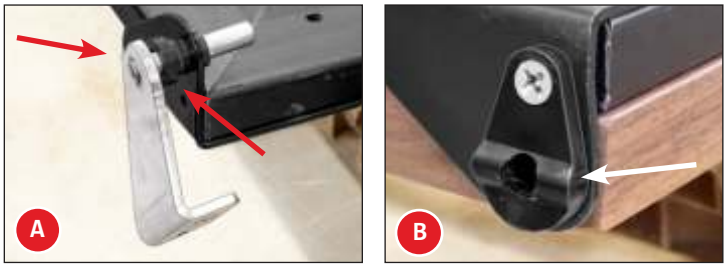


***Fig. 5.*** Remove the top hinge pin & bushing (A) and the door cam riser (B) from the hinge brackets. Do not remove the hinge brackets.

# Cabinet Setup (cont.)

## Overlay Panel Installation (cont.)

### Procedure (cont.)

5. Clamp the door and panel. See fig. 6.

   **NOTE:** If the clamp jaws are not padded, insert padding between the clamp and the overlay to protect the panel's finish.

6. Fasten the overlay to the door (see fig. 7). Then, remove the clamps.

   **NOTE:** Be sure the mounting screws are shorter than the panel width.

7. Mark the drill bits with the measures below. See fig. 8.
   - **a.** 3/8" bit at 1/2" (25.4 mm)
   - **b.** 17/64" bit at 1-1/8" (28.575 mm)

8. **Carefully** drill holes for both hinges as described below. See fig. 9.
   - **a.** Drill the 3/8" hinge bushing/cam hole.
   - **b.** At the center of the bushing hole, drill the 17/64" hinge pin hole.

   **NOTE:** Drill the hinge pin hole until the mark reaches the hinge bracket, not the bottom of the bushing hole. See fig. 9.

**!** Be sure to drill straight down to prevent cracking the overlay and/or drilling through the side.

9. With the existing hardware, install the door handle(s). See figs. 10 and 11.
10. Install the hinge components.
11. Install the gasket.

    **NOTE:** Verify the gasket is fully seated in the gasket channel. See fig. 12.

12. Install the door assembly. Verify the door closes correctly and the gasket seals without gaps. Repeat the process for each door.

***Fig. 6.*** Be sure the overlay's center slot is positioned at the top of the door.

***Fig. 7.*** Cabinet door predrilled hole locations.

***Fig. 8.*** Mark the hole depths on the drill bits.

***Fig. 9.*** Drill the 3/8" hole first. *THEN* drill the 17/64" hole.

***Fig. 10.*** Handle screw locations.

***Fig. 11.*** Installed door handles.

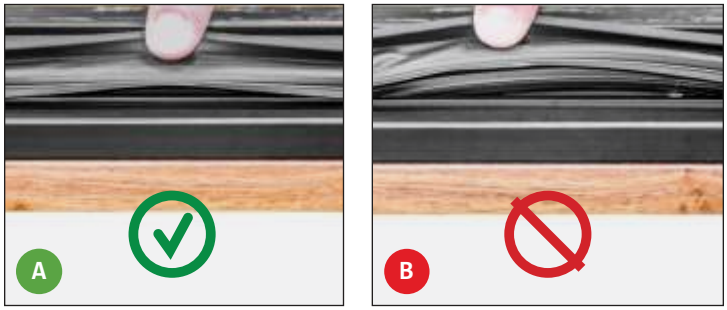


***Fig. 12.*** Pull the side of the gasket to check its installation.
**A: CORRECT**; gasket channel is NOT visible.
**B: INCORRECT**; gasket channel is visible.

# Cabinet Operation

## Startup

- The compressor is ready to operate when the unit is purchased. All you need to do is plug in the cooler.
- Excessive tampering with the control could lead to service difficulties. If replacing the temperature control is ever needed, be sure to order the replacement from your TRUE dealer or recommended service agent.
- Good air flow inside your TRUE unit is critical. Take care to prevent product from pressing against the sides or back wall and coming within 4" (101.6 mm) of the evaporator housing. Refrigerated air off the evaporator coil must circulate throughout the cabinet for even product temperatures.

**NOTE:** If the unit is disconnected or shut off, wait 5 minutes before restarting.

**RECOMMENDATION** – Before loading product, run your TRUE unit empty for 24 hours to verify proper operation. Remember, our factory warranty **DOES NOT** cover product loss!

## Temperature Control & Light Switch Location

The light symbol shows the approximate location of the light switch.

### Factory Installed TruLumina LED

To change the display color of the TruLumina LEDs, toggle the light switch off and then on. Repeat to cycle trough all available colors. Leaving the light switch in the "off" position for two seconds will turn off the lights.

*Light Switch on Glass Door Models*
Inside the top ceiling.

*Electronic Temperature Control*
On the front of grill.

**FOR MORE INFORMATION**

For more information regarding a cabinet's temperature control adjustment or general sequence of operation, please see our **Temperature Control Adjustment—Sequence of Operation Manual** in our resource library at **https://www.truemfg.com/Service-Manuals/Sequence-of-Operation** or follow the QR code.

# Cabinet Operation (cont.)

## General Sequence of Operation: Refrigerator and Freezer Cabinets

### When the cabinet is plugged in

- Interior lights will illuminate on glass door models (see previous page for light switch location).
- An electronic control with digital display will illuminate (if installed).
- There may be a short delay before the compressor and/or evaporator fan(s) start. This delay may be determined by time or by temperature, which could be the result of an initial defrost event that will last at least 6 minutes.
- The temperature control/thermostat may cycle the compressor and evaporator fan(s) on and off together. Every cabinet will require a defrost event to ensure the evaporator coil remains clear of frost and ice buildup. Defrost is initiated by a defrost timer or by the electronic control.

  **EXCEPTION** – Models TSID, TDBD, TCGG, and TMW do not have an evaporator fan(s).
- The temperature control/thermostat senses either an evaporator coil temperature or air temperature, NOT product temperature.
- An analog thermometer, digital thermometer, or electronic control display may reflect the refrigeration cycle swings of up and down temperatures, NOT product temperature. **The most accurate method to determine a cabinet's operation is to verify the product temperature.**
- Refrigerators with mechanical temperature controls will defrost during every compressor off-cycle.
- Freezers with mechanical temperature controls will defrost by time initiation as determined by a defrost timer.

  **EXCEPTION** – Models TFM, TDC, THDC and TMW require a manual defrost. The frequency of this manual defrost will depend on the cabinet's usage and ambient conditions.
- An electronic control with a digital display (if installed) will show **def** during defrost.

  **NOTE:** The display may have a short delay before showing a temperature after a defrost event has expired and instead show **def** during a refrigeration cycle.
- Models with an analog or digital thermometer may show higher than normal temperatures during defrost.
- A refrigerator will use the evaporator fans to clear the coil during defrost.

  **EXCEPTION** – Models TSID, TDBD, and TCGG do not have an evaporator fan(s).
- A freezer will use heaters to clear the evaporator coil during defrost.

  **NOTE:** The evaporator coil heater and drain tube heater are only energized during defrost. Defrost is terminated when a specific evaporator coil temperature is reached or by a time duration.

# Cabinet Operation (cont.)

## Draft Beer Storage, Handling & Operation

**DRAFT BEER SHOULD BE TREATED AS A FOOD PRODUCT.**

In most instances draft beer is **not pasteurized**. It is very important that you store and handle it properly.

Follow these steps to ensure the highest quality and consumer satisfaction.

- Immediately store draft beer in a refrigerated cabinet.
- Draft beer products have a recommended shelf life. If you have questions regarding the shelf life of any of your draft products, please consult with your supplying depot or respective brewer representative.
- Store kegs separately from food products. If your cooler is used to refrigerate draft and food products, **DO NOT** store food near or on the kegs.
- Keep keg storage and dispensing areas clean to prevent any possibility of contaminating your draft products.

### Temperature

Correct temperature is a key factor in storing and dispensing draft beer. Beer that is too cool or too warm may be subject to flavor loss, off taste and dispensing problems.

#### *Helpful Hints for Controlling Temperature*

- Keep a thermometer handy.
- Monitor the draft temperature in the cooler and at the tap.
- Keep cooler door closed as much as possible to avoid temperature fluctuation.
- Regular maintenance of refrigeration equipment is recommended.

### Pressure

Dispensing pressures differ based on the following:

- Draft dispensing line length.
- Draft dispensing system type.
- Actual product (pressure requirements vary).
- Product temperature.
- Pressurizing agent: Air pressure, $CO_2$ or special blended gases.

#### *Helpful Hints on Maintaining the Correct Pressure*

- Know which pressurizing agent to use on which product, and why.
- Monitor your regulators to ensure applied pressure remains constant.
- Keep equipment in good repair.

### Tapping

**DO NOT** agitate the kegs unnecessarily. If excessive agitation occurs, allow kegs to settle 1 to 2 hours before tapping.

Prior to tapping the keg, ensure all beer faucets in the serving location are in the off position. Completely remove the dust cover (identification cap) from the keg.

# Cabinet Operation (cont.)

## Draft Beer Problems & Troubleshooting

To minimize draft beer problems, always follow the recommended instructions for temperature and $CO_2$ pressures from your beer supplier.

### Flat Beer

Foamy head disappears quickly. Beer lacks usual zestful, brewery-fresh flavor.

- $CO_2$ turned off when not in use.
- Contaminated air source (associated with compressed air).
- Greasy glasses.
- Not enough pressure.
- Pressure shut off during night.
- Loose tap or vent connection.
- Sluggish pressure regulator.
- Obstruction in lines.

### False Head

Large soap-like bubbles, head dissolves very quickly.

- Dry glasses.
- Improper pour.
- Pressure required does not correspond to beer temperature.
- Coils or direct draw beer lines warmer than beer in keg.
- Small lines into large faucet shanks.
- Beer drawn improperly.

### Wild Beer

Beer, when drawn, is all foam and not enough liquid beer.

- Beer drawn improperly.
- Faucet in bad or worn condition.
- Kinks, dents, twists or other obstructions in line.
- Traps in beer lines.
- Beer too warm in kegs or lines.
- Too much pressure.
- Creeping gauge causing too much pressure.

### Cloudy Beer

Beer in the glass appears hazy, not clear.

- Dirty glass or faucet.
- Beer over-chilled.
- Beer temperature variance in keg (beer may have warmed up at some time).
- Hot spots in beer lines.
- Cutting beer through faucet.
- Beer line in poor condition.
- Dirty lines.
- Beer that has been frozen.

### Bad Taste

- Dirty faucet.
- Old or dirty beer lines.
- Failure to flush beer lines with water after each empty keg.
- Unsanitary conditions at bar.
- Foul air or dirt in lines.
- Oily air; greasy kitchen air.
- Temperature of package too warm.
- Dry glasses.

# Cabinet Operation (cont.)

## Changing $CO_2$ Gas Cylinder

**CAUTION** – Always follow these instructions when you replace a $CO_2$ gas cylinder:

### Procedure

1. Close cylinder valve **A**.
2. Remove tap head **D** from the barrel. Pull the pressure release ring on the body of the tap to release pressure remaining in the line (**DO NOT** close regulator shut-off **C**).
3. Remove or loosen regulator key **B** by turning counter clockwise.
4. Remove the regulator from used cylinder at outlet **E**.
5. Remove the dust cap from new gas cylinder at outlet **E** and clear dust from the outlet by opening and closing valve **A** quickly using appropriate wrench.
6. Attach the regulator to the new cylinder at outlet **E** (use new fiber/plastic washer, if required).
7. Completely open valve **A**.
8. Close valve **C**.
9. Adjust regulator key **B** by turning clockwise to set pressure. Check setting by opening **C** and pulling and releasing the ring **F** on the pressure release valve on the body of the tap.
10. Tap the barrel at **D** with valve **C** open.

**NOTE:**

- Don't lay $CO_2$ cylinders flat.
- Don't drop $CO_2$ cylinders.
- It requires 1/2 lb. (0.23 kg) of $CO_2$ to dispense a half-barrel of beer at 38˚F (3.3˚C) with 15 psi (1.03 bar) of pressure on the barrel.

**WARNING** – Contents under pressure. Take care when handling filled $CO_2$ tanks. If unfamiliar with using $CO_2$ tanks and/or regulators, seek information from your local distributor or brewer representative before proceeding.

## Pressure Adjustment on $CO_2$ Regulator

### Increasing Pressure

### Procedure

1. Close regulator shut-off **C**.
2. Turn the regulator key **B** clockwise and adjust setting.
3. Tap the gauge for an accurate reading.
4. Open regulator shut-off **C** and draw beer.

### Decreasing Pressure

### Procedure

1. Close regulator shut-off **C**.
2. Untap the barrel at **D** and to bleed line, activate the tap handle. Leave it in the open position.
3. Slowly open regulator shut-off **C** and simultaneously turn regulator key **B** counter-clockwise to zero reading.
4. Close regulator shut-off **C** and set pressure by turning regulator key **B** clockwise. Check the setting by opening and closing valve **C**.
5. Close the tap head **D** (put in **OFF** position).
6. Tap the barrel at **D** and open regulator shut-off **C**.

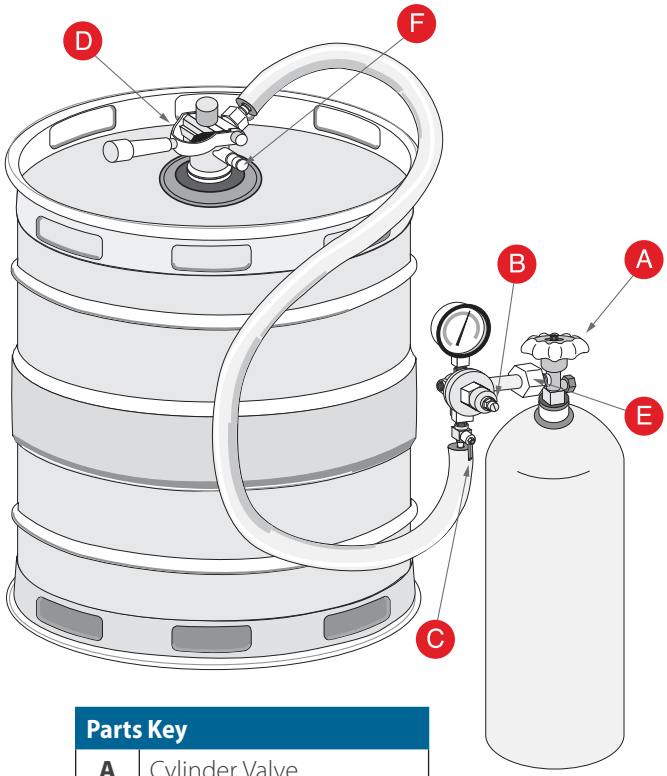


| Parts Key | |
|---|---|
| **A** | Cylinder Valve |
| **B** | Regulator Key |
| **C** | Regulator Shut-off |
| **D** | Tap Head |
| **E** | $CO_2$ Cylinder Outlet |
| **F** | Ring |

# Maintenance, Care & Cleaning

## Draft Tower Cleaning

Regardless of design, draught dispensers must be cleaned regularly. Flushing the draught dispenser with only water is not enough to maintain cleanliness. True recommends cleaning the draught dispenser whenever changing to a fresh keg.

Clean dispensers ensure your draught beer will be at its best when served. Although the beer in the barrel is in excellent condition, the beer can become less satisfying if drawn through a beer line and faucet that are not kept clean.

**NOTE:** Use cleaners approved by your beer supplier and follow their instructions. If you are using the cleaning kit purchased from TRUE, follow the instructions below:

### Prepare Solution

Add 1/2 oz. (14.2 g) of cleaning solution to each quart of warm water. Fill the pump bottle with the mixed cleaning solution.

### Procedure

1. Shut-off the $CO_2$ at the regulator.
2. Remove the tapping device (keg coupler) from the keg.
3. Unscrew the handle the from faucet.
4. Remove the beer faucet with the spanner wrench; turn the faucet clockwise to remove. See fig. 1.
5. Put the tap and faucet parts in a bucket.
6. Thread the pump bottle hose to the beer column tap outlet and allow the beer line to drain in the bucket. See fig. 2.

   **NOTE**: Be sure the rubber gasket is in place to prevent leaks.
7. Pump the solution from the bottle through the beer line(s) and into the bucket. Wait 10 minutes while the cleaning solution works through the lines.
8. With the supplied brush, clean the beer faucet parts. See fig. 3.
9. Rinse all parts thoroughly.
10. Rinse the bucket, pump bottle and hose thoroughly with clean cool water.
11. Fill the pump bottle with clean cool water and pump water through lines until it runs clear. Repeat as necessary.
12. After the water runs clear, assemble and install the faucet. Then re-tap the keg.

**Beer Tap Cleaning Kit – Required Tools**

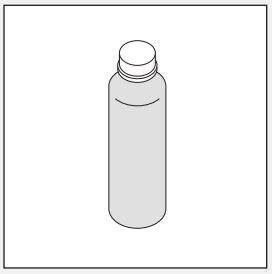
BLC System Cleaner

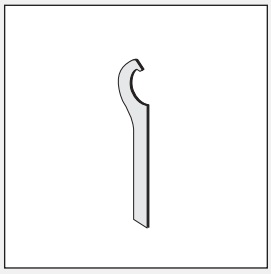
Spanner Wrench

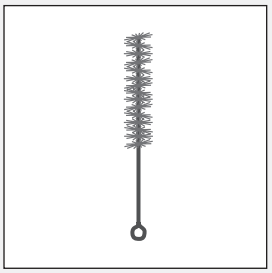
Brush

Rubber Gasket

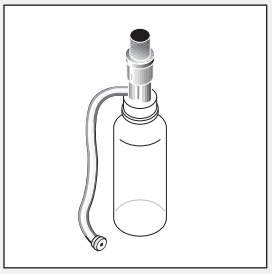
Pump Bottle & Tube

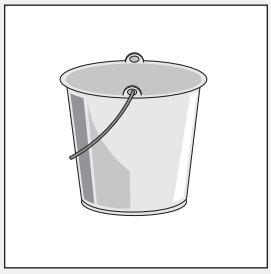
Bucket & Fresh Water

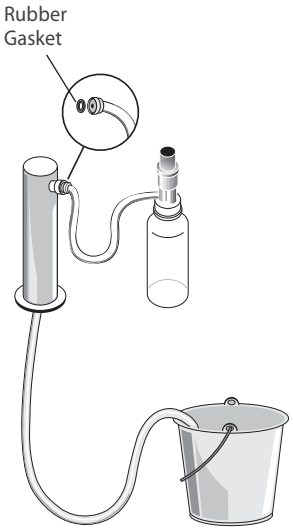


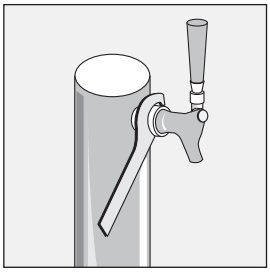
***Fig. 1.*** Carefully remove the faucet.

***Fig. 2.*** Drain the beer from the line.

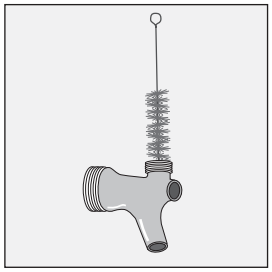
***Fig. 3.*** Thoroughly clean the faucet components.

# Maintenance, Care & Cleaning (cont.)

**CAUTION** - Take care during operation, maintenance or repairs to avoid cuts or pinching from any cabinet part/component.

## Condenser Coil Cleaning

When using electrical appliances, basic safety precautions should be followed, including the following:

**WARNING** – **DO NOT** clean appliance with a pressure washer or hose.

**CAUTION** – Fins are sharp. Caution must be used to avoid eye injury. Eye protection is recommended.

### Tools Required

- 1/4" nut driver
- 3/8" nut driver
- Stiff bristle brush
- Tank of compressed air
- Vacuum cleaner
- Flashlight
- Eye protection

### Procedure

1. Disconnect power to unit.
2. Remove the screw securing the louvered grill to the cabinet. See fig. 1.
3. Pull on the grill assembly to release it from the magnetic brackets. See fig. 2.
4. Carefully clean off accumulated dirt from the front fins of the condensing coil with a stiff bristle brush. See fig. 3.
5. With dirt removed from the surface of the coil, use a flashlight to verify that you can see through the coil and observe the condenser fan blade spinning. See fig. 4.

   If the view is clear, reinstall louvered grill, connect unit to power and verify operation.

   **If the view is still blocked with dirt, proceed to step 6.**
6. Remove the condenser base bolts. See fig. 5.
7. Remove the condenser coil brackets. See fig. 6.
8. Carefully slide the condensing unit out (tubing connections are flexible). See fig. 7. Gently blow compressed air or $CO_2$ through the coil until it is clean.
9. Carefully vacuum any dirt around and behind the condensing unit area.
10. Carefully slide the compressor assembly back into position and replace the bolts.
11. Reinstall the louvered grill, connect power to the unit, and verify operation.

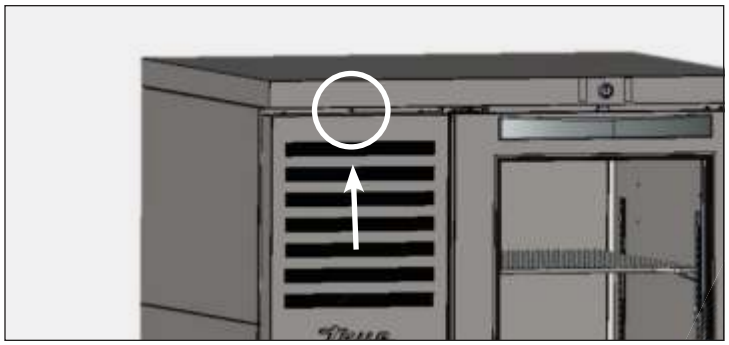

***Fig. 1.*** Louver grill screw location.

***Fig. 2.*** Pull the grill forward before lifting up.

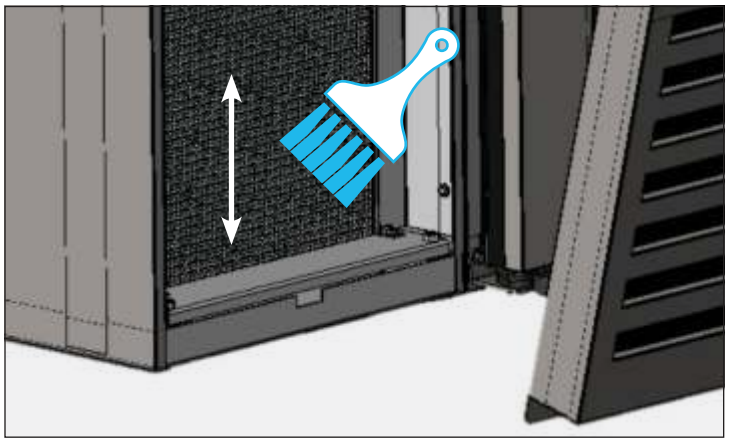

***Fig. 3.*** Never brush across the coil fins.

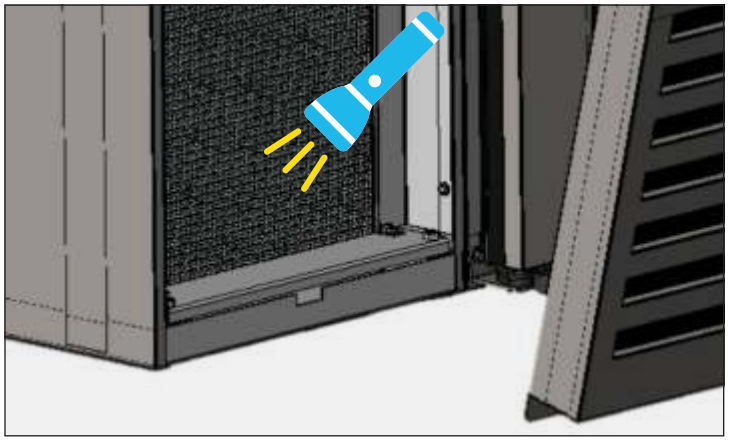

***Fig. 4.*** Verify all blockages have been removed.

# Maintenance, Care & Cleaning (cont.)

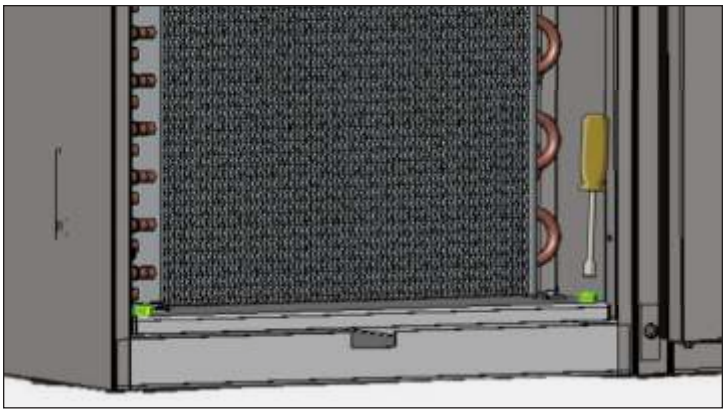

***Fig. 5.*** Remove the condensing base bolts.

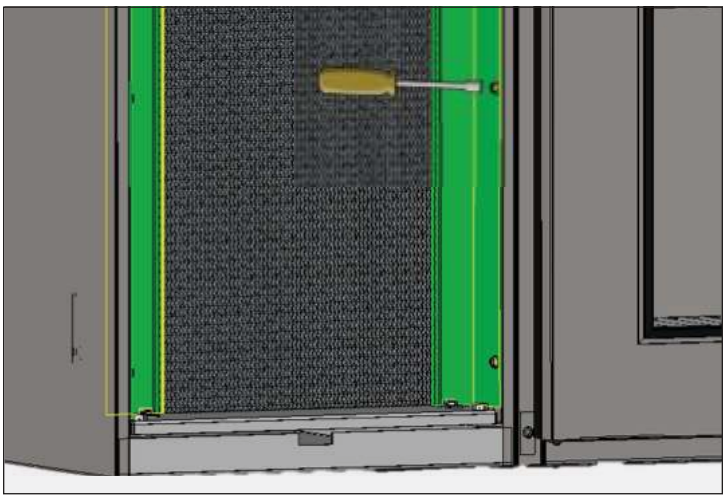

***Fig. 6.*** Remove the coil brackets.

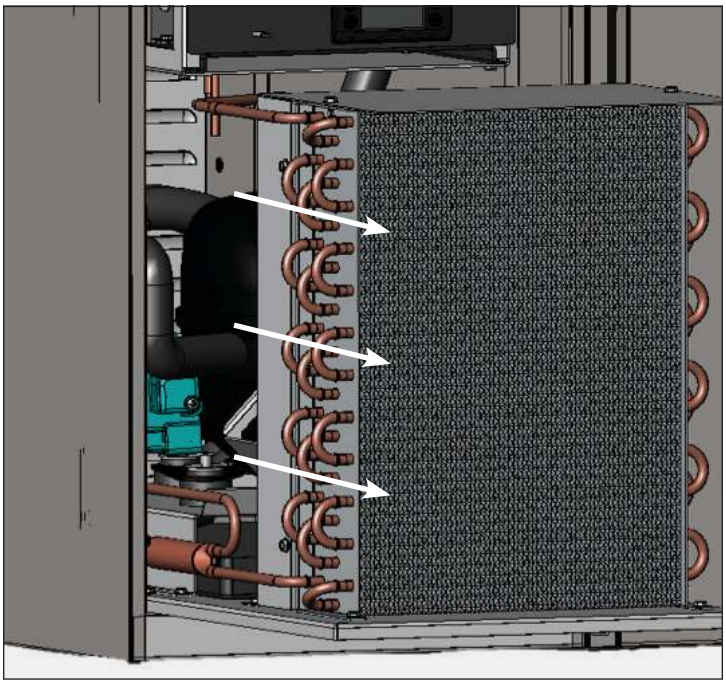

***Fig. 7.*** Carefully slide the condensing unit out.

**Important Warranty Information**
**THE CLEANING OF THE CONDENSER IS NOT COVERED BY WARRANTY!**

If you have any questions, please contact your local TRUE Manufacturing Service Department. See the front cover for locations and contact information.

- Condenser coils accumulate dirt and require cleaning every 30 days or as needed.
- A dirty condenser coil can result in non-warranted repairs and/or cabinet failure.
- Proper cleaning involves removing dust from the condenser by using a soft brush, vacuuming the condenser with a shop vac, or using $CO_2$, nitrogen or pressurized air.
- Do not place any filter material in front of the condensing coil.
- On most units, the condenser is accessible by removing the cabinet's outer grill cover.
- If you cannot remove the dirt adequately, please contact your licensed refrigeration service provider.

# Maintenance, Care & Cleaning (cont.)

## Stainless Steel Care & Cleaning

**CAUTION** – **DO NOT** use any steel wool, abrasive or chlorine-based products to clean stainless steel surfaces.

### Stainless Steel Opponents

There are three basic things which can break down your stainless steel's passivity layer and allow corrosion to form.

- Scratches from wire brushes, scrapers, steel pads, and other items that can be abrasive to stainless steel's surface.
- Deposits left on your stainless steel can leave spots. You may have hard or soft water depending on what part of the country you live in. Hard water can leave spots. Hard water that is heated can leave deposits if left to sit too long. These deposits can cause the passive layer to break down and rust your stainless steel. All deposits left from food prep or service should be removed as soon as possible.
- Chlorides which are present in table salt, food and water, as well as in household and industrial cleaners. These are the worst type of chlorides to use on stainless steel.

### Stainless Steel Cleaning and Restoration

**DO NOT** use stainless steel cleaners or similar solvents to clean plastic or powder-coated parts. Instead, use warm soapy water.

- For routine cleaning and removal of grease and oil, apply white vinegar, ammonia, or any good commercial detergent* with a soft cloth or sponge.
- Stainless steel polish (e.g., Zep® Stainless Steel Polish, Weiman® Stainless Steel Cleaner & Polish, Nyco® Stainless Steel Cleaner & Polish, or Ecolab® Ecoshine®) and olive oil can act as a barrier against fingerprints and smears.
- Degreasers* (e.g., Easy-Off® Specialty Kitchen Degreaser or Simple Green® Industrial Cleaner & Degreaser) are excellent for removal of grease, fatty acids, blood and burnt-on foods on all surfaces.

*__DO NOT__ use detergents or degreasers with chlorides or phosphates.

- For restoration/passivation or removing stubborn stains and discoloration, Brillo® Cameo®, Zud® Cleanser, Ecolab® Specifax™ First Impression® Metal Polish, Sheila Shine, or talc can be applied by rubbing in the direction of the polish lines.

**NOTE:** The use of proprietary names is intended for example only and does not constitute or imply an endorsement. Omission of proprietary cleansers from this list does not imply inadequacy.

## 8 Tips to Help Prevent Rust on Stainless Steel

### Maintain the Cleanliness of Your Equipment

Avoid build-up of hard stains by cleaning frequently. Use cleaners at the recommended strength (alkaline chlorinated or non-chloride).

### Use the Correct Cleaning Tools

Use non-abrasive tools when cleaning your stainless steel products. The stainless steel's passive layer will not be harmed by soft cloths and plastic scouring pads.

### Clean Along Polishing Lines

Polishing lines ("grain") are visible on some stainless steels. Always scrub parallel to polishing lines when visible. Use a plastic scouring pad or soft cloth when you cannot see the grain.

### Use Alkaline, Alkaline-Chlorinated or Non-Chloride Cleaners

While many traditional cleaners are loaded with chlorides, the industry is providing an ever increasing choice of non-chloride cleaners. If you are not sure of your cleaner's chloride content, contact your cleaner supplier. If they tell you that your present cleaner contains chlorides, ask if they have an alternative.
Avoid cleaners containing quaternary salts, as they can attack stainless steel, causing pitting and rusting.

### Rinse

When using chlorinated cleaners, you must rinse and wipe dry immediately. It is better to wipe standing cleaning agents and water as soon as possible. Allow the stainless steel equipment to air dry. Oxygen helps maintain the passivity film on stainless steel.

### Never Use Hydrochloric Acid (Muriatic Acid) on Stainless Steel

Even diluted, hydrochloric acid can cause corrosion, pitting and stress corrosion cracking of stainless steel.

### Water Treatment

To reduce deposits, soften hard water when possible. Installation of certain filters can remove corrosive and distasteful elements. Salts in a properly maintained water softener can also be to your advantage. Contact a treatment specialist if you are not sure of the proper water treatment.

### Regularly Restore & Passivate Stainless Steel

Stainless steel gets its stainless properties from the protective chromium oxides on its surface. If these oxides are removed by scouring, or by reaction with harmful chemicals, then the iron in the steel is exposed and can begin to oxidize, or rust. Passivation is a chemical process that removes free iron and other contaminants from the surface of stainless steel, allowing the protective chromium oxides to re-form.

# Cabinet Adjustments, Servicing & Component Replacement

**NOTE:** Any cabinet adjustments are to be made **AFTER** the cabinet has been verified level and properly supported.

## Servicing & Replacing Components

- Replace component parts with OEM (original equipment manufacturer) components.
- Have a licensed service provider service your unit to minimize the risk of possible ignition due to incorrect parts or improper service and to ensure the operator's health and safety.
- Unplug the refrigerator/freezer before cleaning or making any repairs. Setting temperature controls to the 0 position or powering off an electronic control may not remove power from all components (e.g., light circuits, perimeter heaters, and evaporator fans).

## Reverse Door Swing

### Kit Contents (shipped with cabinet)

- Bottom hinge bracket
- Top hinge bracket
- Door cam base and riser
- Top hinge bushing

### Required Tool(s)

- Phillips screwdriver
- 5/16" socket wrench
- Flat blade screwdriver

**NOTE:** Make cabinet adjustments **after** verifying the cabinet is level and supported properly. The example shown is a left hinge door changing to a right hinge door.

### Procedure

1. Locate and remove the bolts securing the top hinge bracket to the front of the cabinet base. Remove the bolts. See fig. 1.
2. With the bolts removed, swing the bracket onto the door. Tilt the top of the door out to provide clearance from the countertop. Lift the door to disengage it from the top hinge bracket. See fig. 2.
3. Remove the bottom hinge assembly from the cabinet. See fig. 3.

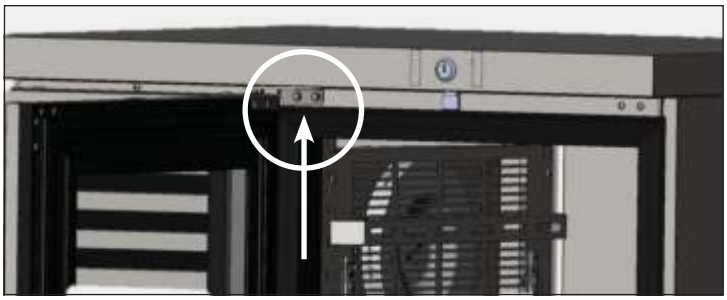

***Fig. 1.*** Top hinge bolt locations.

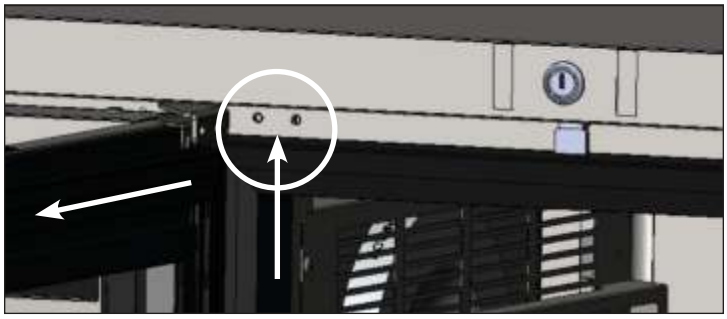

***Fig. 2.*** Remove the top hinge from the unit.

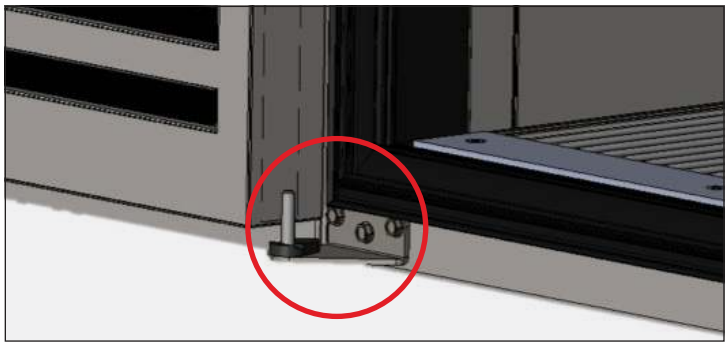

***Fig. 3.*** Lift the door off the bottom hinge.

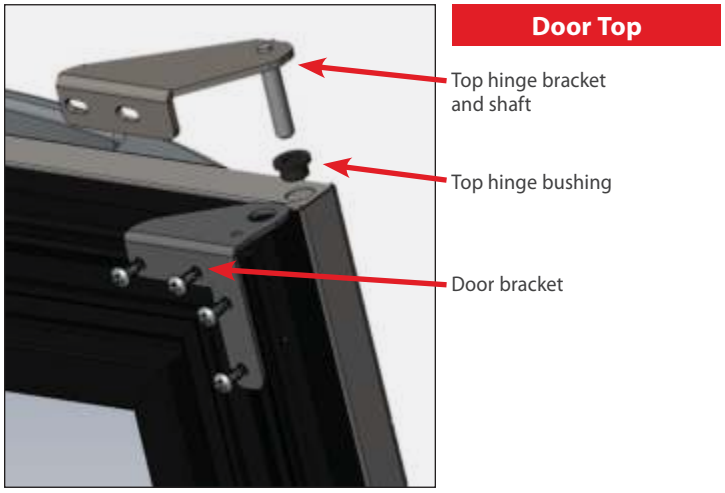


***Fig. 4a.*** Top hinge components.

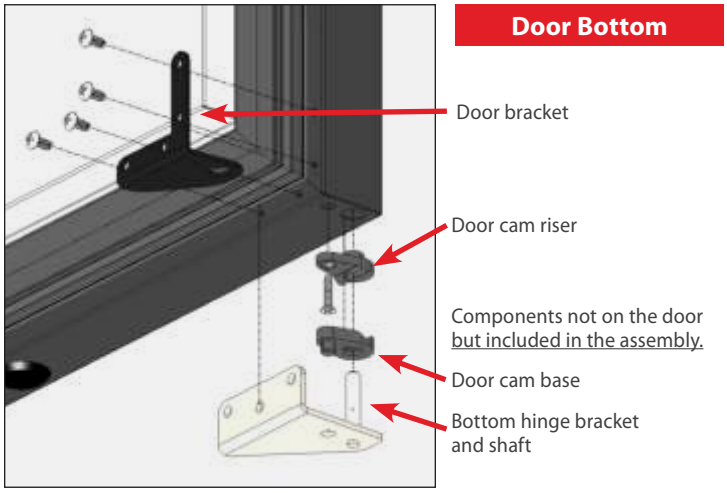


***Fig. 4b.*** Bottom hinge components.

# Cabinet Adjustments, Servicing & Component Replacement (cont.)

## Reverse Door Swing (cont.)

4. Remove all door hardware except the door handle (see figs. 4a and 4b). Set the door brackets aside.

   **NOTE:** The door brackets are the only hardware that will be relocated. All other hardware is new and included in the kit. Door brackets are reversible to the opposite diagonal corner of the door. See fig. 5.

5. Remove any door plugs and all screws on the opposite side of the original door hinge placement. See fig. 6.
6. Install all hardware into the door's new component locations.

   *Door Bottom (see fig. 7a)*
   **a.** Install the bottom door bracket.
   **b.** Install the door cam riser.

   *Door Top (see fig. 7b)*
   **a.** Install the top door bracket.
   **b.** Install the top hinge bushing.
   **c.** Install top hinge bracket and shaft.
7. Insert the screws into the holes opposite their original location. See fig. 8.
8. Install the bottom hinge bracket and shaft to the cabinet. See fig. 9.
   **a.** Install the door cam base to hinge shaft.
   **b.** Lift door onto bottom door hinge bracket and shaft.
9. Secure the top hinge bracket to the cabinet. See fig. 10.

   **NOTE:** Top hinge bracket is slotted for door alignment.

10. Install plug in door in top of door (see fig. 11). Verify correct door operation.

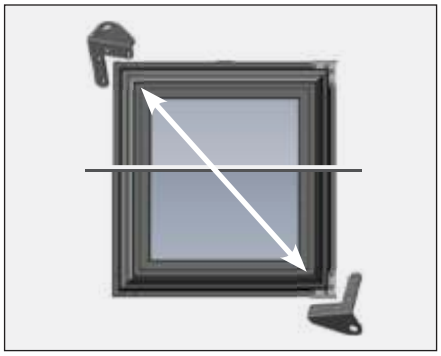

***Fig. 6.*** The current bottom door bracket will be the new top door bracket.

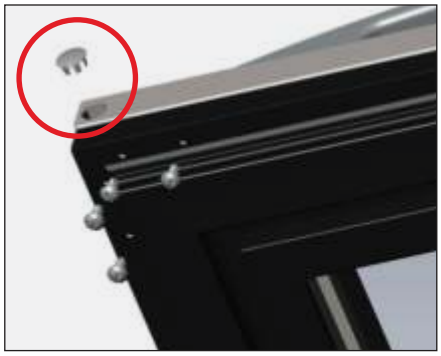

***Fig. 5.*** Remove the door plugs and remaining screws.

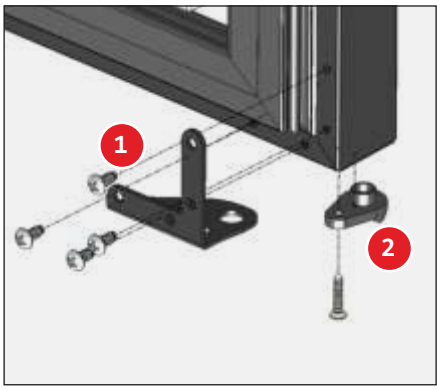


***Fig. 7a.*** Bottom hinge component assembly.

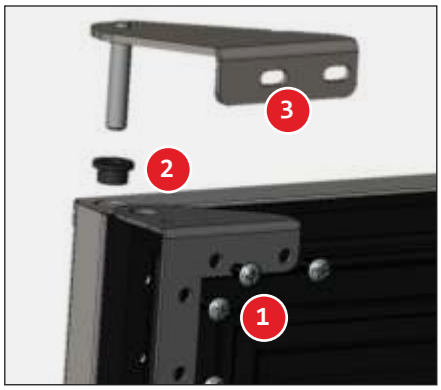


***Fig. 7b.*** Top hinge component assembly.

***Fig. 8.*** Move the hardware from step 5 to the side opposite its original location.

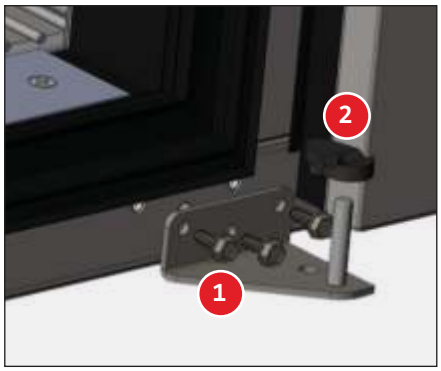


***Fig. 9.*** Install the bottom hinge pin in its new location.

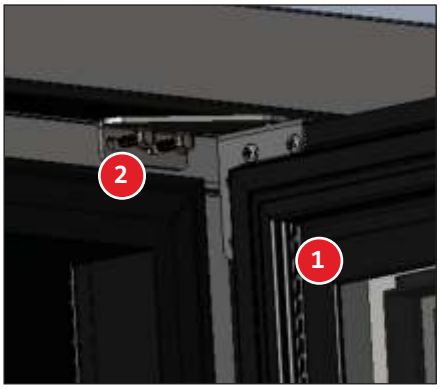


***Fig. 10.*** Install the top hinge and the door.

***Fig. 11.*** Install the plug.

# Cabinet Adjustments, Servicing & Component Replacement (cont.)

## Slide Door Removal

**DO NOT** use the side latch before removing the slide door. The tension on the door cord is needed to execute these operation instructions.

The doors cannot be removed unless they are positioned as described in the instructions below.

### Procedure

1. Position the doors as described below. To remove, lift the positioned door. Then, tilt the top of the door back until the rollers exit the door channel. Then, swing the bottom of the door out of the bottom channel. See figs. 1 and 2.

   *Two-Door Units*
   Center the front door on the cabinet opening. See fig. 3.

   *Three-Door Units* See fig. 4
   - Center Door: Slide 9" (228.6 mm) right
   - Right Door: Slide 14" (355.6 mm) left
   - Left Door: Slide 9-1/2" (241.3 mm) right

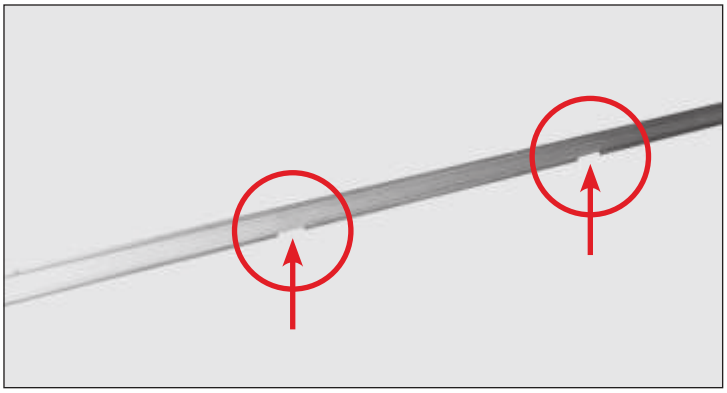

***Fig. 1.*** Door channel openings.

***Fig. 2.*** Carefully remove the door.

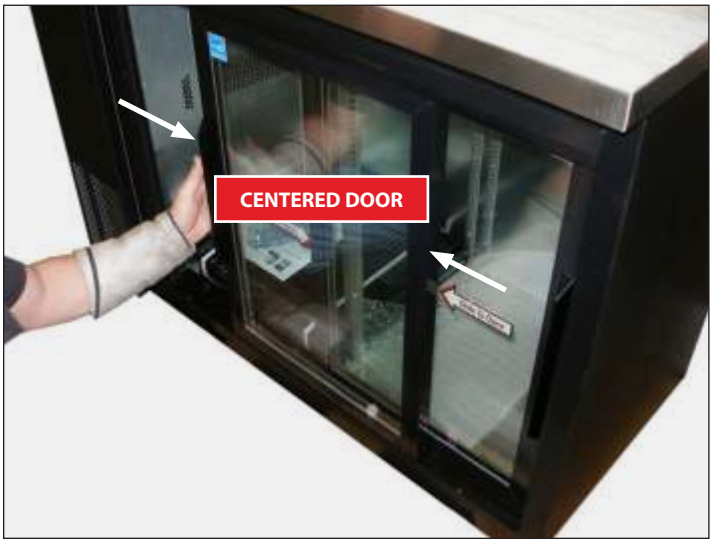


***Fig. 3.*** Two-Door Units: Position the front door at the center of the cabinet.

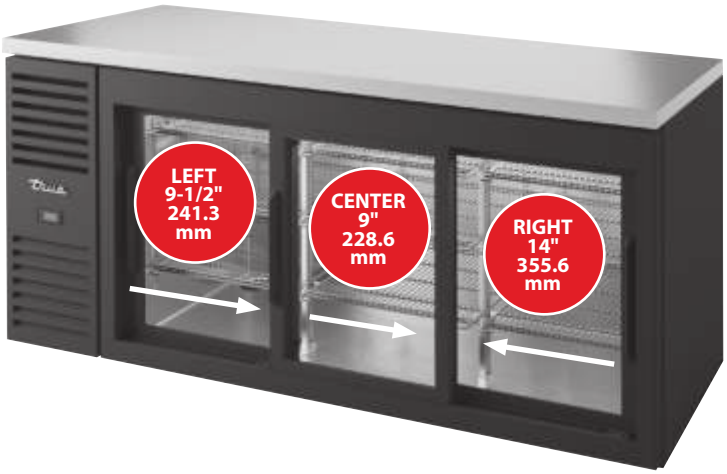


***Fig. 4.*** Three-Door Units: Move the doors as directed to remove doors from channel.

# Cabinet Adjustments, Servicing & Component Replacement (cont.)

## Slide Door Removal (cont.)

2. Remove the door cord from the roller bracket. See figs. 5 and 6.

   **NOTE:** The black plastic tab holding the door cord slides out the back.

3. Let the door cord slowly retract back into the door side channel.

   **NOTE:** When reinstalling the door, be sure the door cord grommet attaches to roller slot closest to the pulley. See fig. 7.

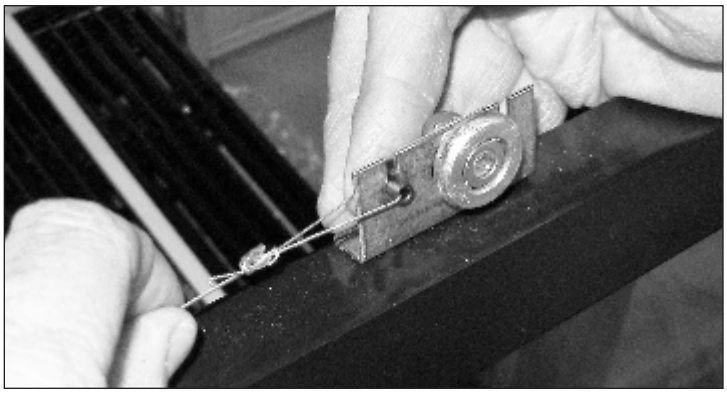

***Fig. 5.*** Remove the door cord from the roller bracket.

***Fig. 6.*** Slide the the black tab holding the door cord out the back

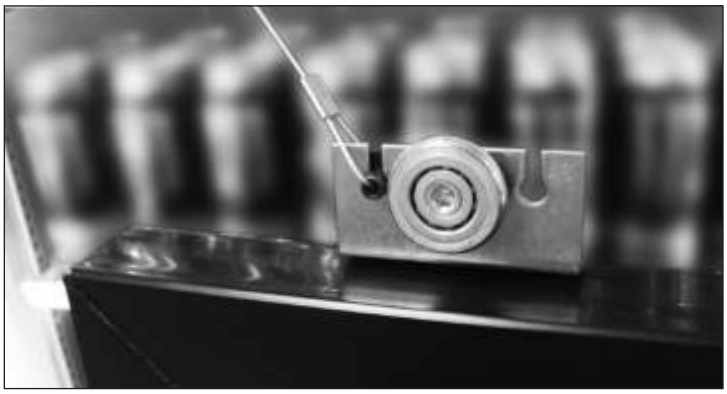

***Fig. 7.*** Be sure the door cord is in the roller slot closest to the pulley.

# Cabinet Adjustments, Servicing & Component Replacement (cont.)

## Slide Door Operation – Door Adjustment

Only adjust the cabinet after it has been installed in its final location and correctly leveled.

### Procedure

1. Completely close the slide doors and check for openings. If there are any gaps/openings between the closed doors and cabinet, the doors will need to be adjusted.
2. With a 7/16" wrench or adjustable wrench and 1/8" Allen wrench, loosen the roller and move it along the slotted hole. After the adjustment has been made tighten the roller into place. See fig. 1.

***Fig. 1.*** Adjust the roller.

## Slide Door Operation – Hold-Open Feature

The hold-open feature keeps the door in the open position.

### Procedure

1. Slide the door open.
2. Latch the door in the open position from the back side of door (notch in track). See figs. 1 and 2.

**NOTE:** Figs. 1 and 2 show the rear view of the door and track.

***Fig. 1.*** Door latch is in the open position (engaged with notch).

***Fig. 2.*** Door latch is in the closed position (disengaged from notch).

# Cabinet Adjustments, Servicing & Component Replacement (cont.)

## Gasket Replacement

### Tools Required

- Caulk gun
- Black 100% silicone

There are two types of door gaskets; narrow and wide gaskets (see fig 1). The correct gasket for your unit varies by cabinet age and model. The gaskets are **NOT** interchangeable.

**NOTE:** For narrow gaskets, it's important to remember which track the gasket was removed from. Normally, the gasket is in the center track on the top, bottom, and handle sides. On the hinge side, it's on the inside track.

### Procedure

1. From the upper right or left-hand corner, carefully pull removable gasket away from the door. See fig. 2.
2. Apply silicone to each corner of the door/gasket channel. See fig. 3.
3. After applying silicone to the corners, push the gaskets back into their original tracks. Press corners in

   **NOTE:** The silicone will seal any possible air leaks. Excess silicone should seep out of the track.
4. Clean any excess silicone.

**NOTE:** Gasket color may vary depending on unit.

***Fig. 1.*** There are two gasket types. A: Narrow gasket; B: Wide gasket.

***Fig. 2.*** Pull the gasket starting at an upper corner.

***Fig. 3.*** Apply silicone to each corner of the gasket channel.

***Fig. 4.*** It is common to see silicone pushed out of track around the gasket. This is how you know enough silicone was used.

# Cabinet Adjustments, Servicing & Component Replacement (cont.)

## Swing Door Lock & Cam Replacement

The door must be open prior to proceeding.

### Procedure: Removing Components

1. Insert the master key (included with the replacement lock kit) into the lock cylinder.
2. Turn the key and pull to remove the cylinder from the lock barrel.
3. Slide the lock cam/bar out of the bottom of the lock barrel.

### Procedure: Installing Components

1. Slide the lock cam/bar into the bottom of the lock barrel.
2. Push the lock cylinder with master key into the lock barrel.

   **NOTE:** Ensure the pin of the back of the lock cylinder aligns with the notch in the lock cam/bar. See fig. 3.

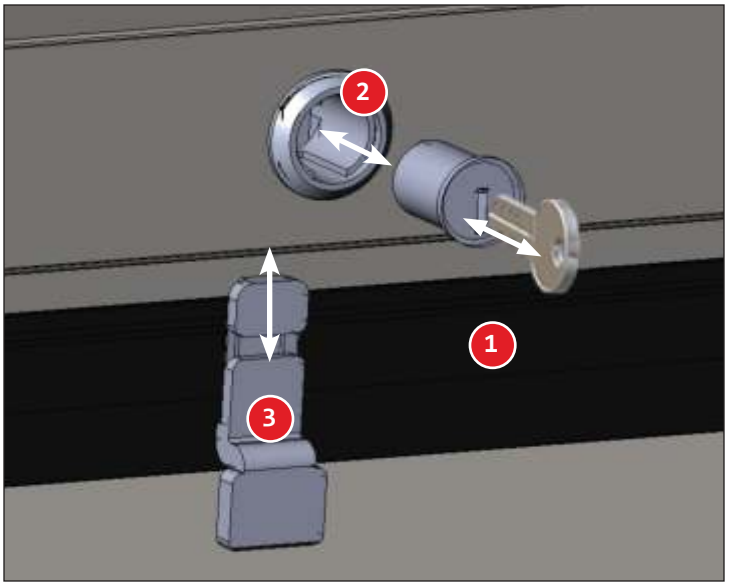


***Fig. 1.*** Front view of removing/installing components.

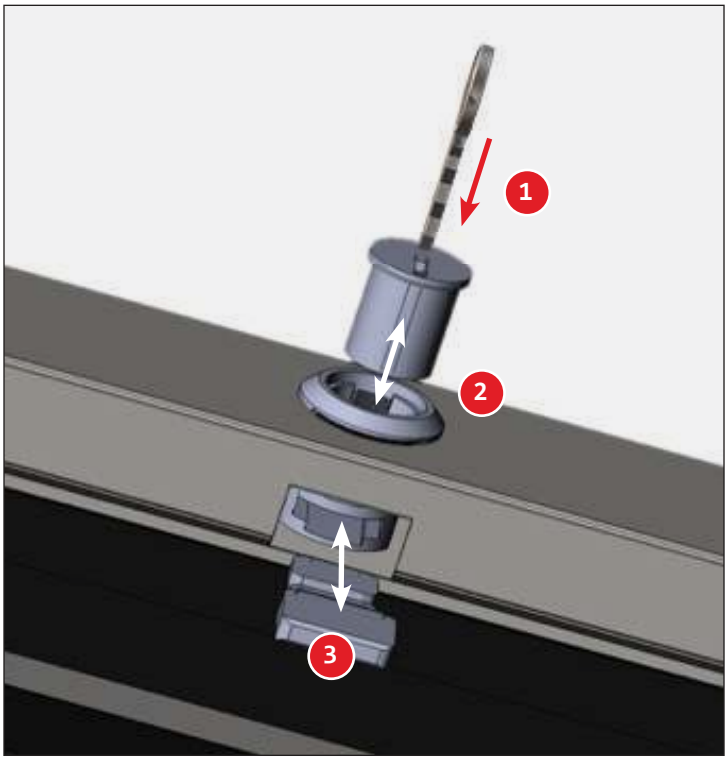


***Fig. 2.*** Bottom view of removing/installing components.

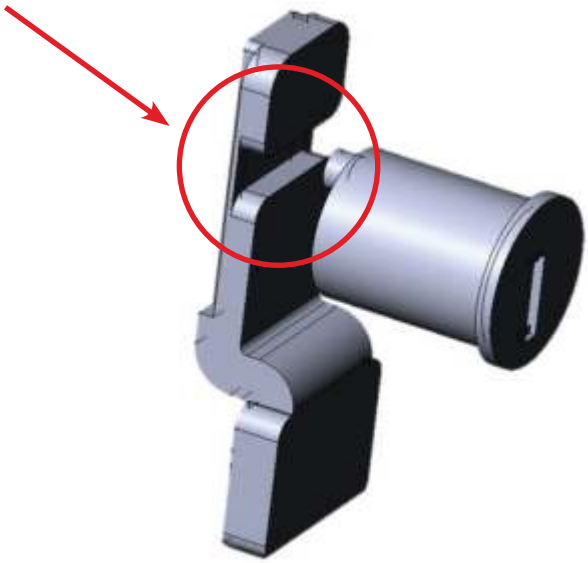

***Fig. 3.*** Lock cam/bar notch

**FOR MORE INFORMATION**

For additional maintenance instruction, please visit the media center at

**www.truemfg.com**

## USA Foodservice & Canada Warranty Statement

# Warranty Information

**To view and download the Warranty Statements for USA and Canada, please scan the QR code below.**

# NOTES

# NOTES

truemfg.com

BP_191148_07.22