ULTRA NX, 120V WHT/SST FLAT LID

Height: 29.5" (74.9cm) Width: 16.6" (42.2cm) Depth: 26.4" (67.1cm)

- Patented beverage monitoring technology and reversing auger design ensure consistent, great tasting frozen beverages
- Enhanced auger drive system and seal design for long-lasting, reliable performance
- New leak capture feature helps reduce service costs and clean-up time
- BUNNlink compatible
- Two large product hoppers hold 3 gallons (11.4L) each to maximize serving capacity
- User interface communicates need for cleaning and maintenance
- Low-product alert to minimize product outages
- Quick defrost feature to ensure beverage quality and maximize uptime
- USB for easy software updates and downloads
- Optional faucet available for dispensing chilled (non-frozen) products
- Sanitation listings NSF 18 and NSF 6 (Dairy)
- R290 all-natural refrigerant provides a sustainable platform with extremely low Global Warming Potential

Agency:

Intertek NSF

Specifications

Product #: 58000.0002

Autofill: None

Flavors: 2 Flavors

Finish: Stainless/White

Hoppers: Two

Refrigerant: R290

Dispense: Pull & Hold

Handle: Extended Handle

Additional Features

Electrical & Capacity

Volts*	Amps	Watts	Cord Attached	Plug Type	8oz cups/hr 236ml cups/hr	Input H²O Temp.	Phase	# Wires plus Ground	Hertz
120	12	1440	Yes	NEMA 5-15P	-	60°F (15.5°C)	1	2	60

*When a BUNN is machine rated 120/208-240V, 120/208V or 120/240V, the higher voltage is the supply voltage needed to power the machine. The 120V is there to supply power to some components rated 120V in the machine, but it is not the supply voltage and would not power the machine if the machine is marked with the before mentioned ratings.

Plumbing Requirements

PSI	kPa	Fitting Supplied	Water Flow Required (GPM)
-	-	-	-

CAD Drawings

2D	Revit	KLC
●		

⚠ **WARNING:**

BUNN® reserves the right to change specifications and product design without notice. Such revisions do not entitle the buyer to corresponding changes, improvements, additions or replacements for previously purchased equipment. For most current specifications and other info visit bunn.com.

Last Updated: 07/08/2025

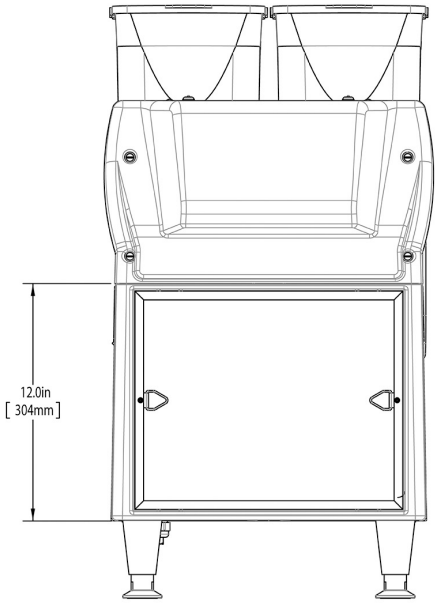

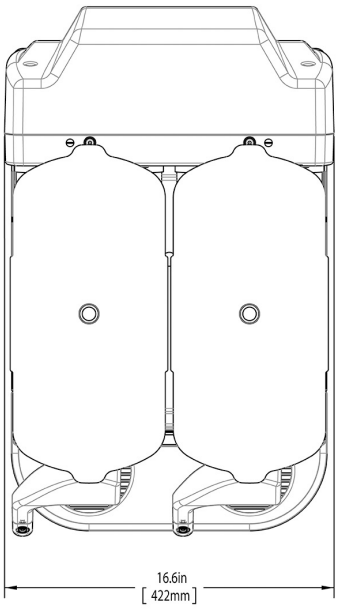

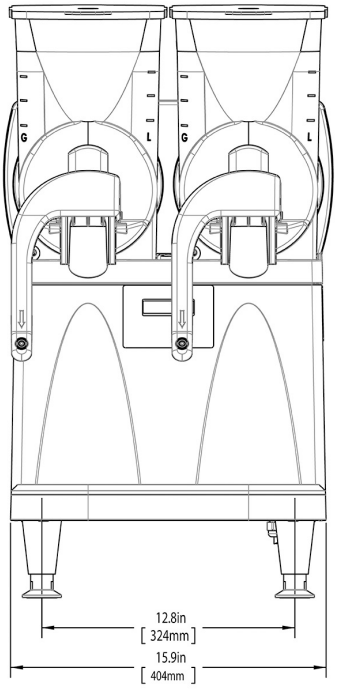

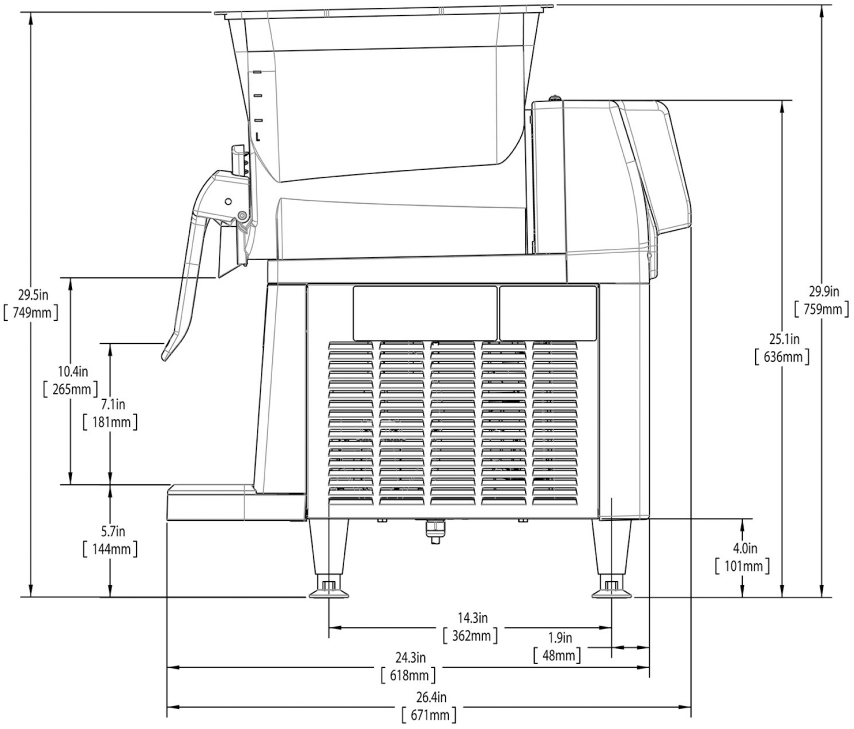

	Unit			Shipping				
	Height	**Width**	**Depth**	**Height**	**Width**	**Depth**	**Weight**	**Volume**
English	29.5 in.	16.6 in.	26.4 in.	43.9 in.	20.5 in.	25.9 in.	121.510 lbs	13.468 ft³
Metric	74.9 cm	42.2 cm	67.1 cm	111.4 cm	52.1 cm	65.7 cm	55.117 kgs	0.381 m³

BUNN® reserves the right to change specifications and product design without notice. Such revisions do not entitle the buyer to corresponding changes, improvements, additions or replacements for previously purchased equipment. For most current specifications and other info visit bunn.com.

Last Updated: 07/08/2025

Related Products & Accessories: ULTRA NX, 120V WHT/SST FLAT LID(58000.0002)

FILTER, AIR 13.562 X 11.062 MAGNETIC Product #: 28122.0002	HANDLE, FAUCET ULTRA BLK NYLON AM Product #: 32265.0003	 KIT, FAUCET SEALS - ULTRA-2 SEALS Product #: 32268.1000[2]	KIT, HDL LOCK ULTRA-2 Product #: 34996.0004	KIT, LID LOCK ULTRA-2 SST CLR W/ NX LID Product #: 34996.0013
KIT,LID & HDL LOCK ULTRA-2 SST CLR W/ NX Product #: 34996.0014	HANDLE, EXTENDED ULTRA NX BLK NYLON AM Product #: 44614.0004	DRIP TRAY ASSY, BASE ULTRA NX - WHT Product #: 57659.1000	DRIP TRAY COVER, ULTRA NX - WHT Product #: 57660.0000	VALVE, FAUCET LIQUID BLACK ULTRA NX Product #: 57793.0001

KIT, PM ULTRA NX

Product #: 58054.0000

[1]NSF Certified [2]NSF Certified with spec sheet model listed [3]NSF Certified under Solventum Purification [4]NSF Certified under Mavea LLC [5]NSF Certified under Zojirushi [6]NSF Certified under Qins Inc [7]NSF COMPONENT Certified

BUNN® reserves the right to change specifications and product design without notice. Such revisions do not entitle the buyer to corresponding changes, improvements, additions or replacements for previously purchased equipment. For most current specifications and other info visit bunn.com.

Last Updated: 07/08/2025

Serving & Holding Options: ULTRA NX, 120V WHT/SST FLAT LID(58000.0002)

Serving and Holding selections are currently unavailable. Please contact your sales representative to find out more information.

[1]NSF Certified [2]NSF Certified with spec sheet model listed [3]NSF Certified under Solventum Purification [4]NSF Certified under Mavea LLC [5]NSF Certified under Zojirushi [6]NSF Certified under Qins Inc [7]NSF COMPONENT Certified

BUNN® reserves the right to change specifications and product design without notice. Such revisions do not entitle the buyer to corresponding changes, improvements, additions or replacements for previously purchased equipment. For most current specifications and other info visit bunn.com.

Last Updated: 07/08/2025