Garland

U.S. Range

Gas Controls

Technical Reference Manual

Part # GCTRM Rev 3 (12/10/09)

© 2006 Garland Commercial Industries, Inc.

Garland & US Range Technical Reference Manual
Table Of Contents

Section		Page
Section 1	**Model Number Identification**	**5**
	General Information All Models	6
	Garland G Series Restaurant Ranges(2007 – Sit Control)	6
	US Range U Series Restaurant Ranges(2007 – Sit Control)	8
	Sunfire X Series Restaurant Ranges(2007 – Sit Control)	10
	Garland Restaurant Series	12
	Garland Heavy DutyMaster Series Model Numbers	13
	Garland 40 Series Heavy Duty	14
	US Range Restaurant Series Model Numbers	15
	US Range Heavy Duty Cuisine Series Models	16
Section 2	**Serial Number Identification**	**17**
Section 3	**Certification Markings**	**21**
Section 4	**Properties And Characteristics of Fuel Gases**	**25**
Section 5	**Operation Of Controls**	**27**
Section 6	**Gas Valves And Adjustments**	**31**
Section 7	**Adjustments, Removal, Replacement, And Calibration Of Controls**	**37**
	630 Euro Sit Control	38
	BJWA Gas Thermostat	42
	Heavy Duty FDO Control Thermostat	44
	UN Type Griddle Thermostat	45
	Electric Thermostat	46
Section 8	**Gas Pressure Regulators**	**49**
Section 9	**Thermocouples And How They Work**	**53**
Section 10	**Trouble Shooting The Oven Pilot Safety System**	**55**
Section 11	**Gas Equipment Field Service Trouble Shooting Guide**	**59**
Section 12	**Maintenance & Care Instructions For Ranges And Oven Surfaces**	**61**
Section 13	**Gas Technician's Glossary**	**65**
Section 14	**Range Wiring Diagrams**	**71**
Section 15	**Service Bulletins**	**97**

Garland

U.S. Range

Section 1

Model Number Identification

General Information All Models

- All equipment is supplied with 6" (152mm) legs unless specified
- In the Commonwealth of Massachusetts this product must be installed by a licensed plumber or gas fitter.

Garland G Series Restaurant Ranges (2007 – Sit Control)

Clearances

Clearances Applicable For All Models		
Surface	**Sides**	**Rear**
Combustible Wall Minimum	12" (305mm)	6" (152mm)
Non-Combustible Wall Minimum	0"	0"

Gas Pressures

Gas	Minimum Supply Pressure	Manifold Operating Pressure
Natural	7" WC (17.5 mbar)	4.5" WC (11.25 mbar)
Propane	11" WC (28 mbar)	10" WC (25 mbar)

Gas Inlet Size

Model Width	Connection
24" (610mm) & 36" (914mm)	3/4" NPT Rear Gas Connection
48" (1219mm) & 60" (1524mm)	1" NPT Rear Gas Connection

Individual Burner Input Rates

Burner	Input BTU/HR	
	Natural Gas	Propane Gas
Open Top	33,000	26,000
Hot Top Burner (In lieu of 2 open top burners)	20,000	19,000
Griddle Burner (In lieu of 2 open top burners)	20,000	19,000
Raised Griddle Broiler (Consists of 3 burners)	33,000	33,000
Oven Burner For Full Size Standard or Convection Oven	38,000	32,000
Space Saver Oven	32,000	28,000

Rates are for installations up to 2000' (610m) above sea level

Base Model Designations & Total Input Rates

Model #	Description	Input BTU/Hr	
		Natural Gas	Propane Gas
G24-4S	24" (610mm) nominal size unit, 4 open burners, storage base	132,000	104,000
G24-4L	24" (610mm) nominal size unit, 4 open burners, space saver oven	164,000	132,000
G36-6S	36" (914mm) nominal size unit, 6 open burners, storage base	198,000	156,000
G36-6R	36" (914mm) nominal size unit, 6 open burners, standard oven	236,000	188,000
G36-6C	36" (914mm) nominal size unit, 6 open burners, convection oven	236,000	188,000
G48-8SS	48" (1219mm) nominal size unit, 8 open burners, storage base	264,000	208,000
G48-8RS	48" (1219mm) nominal size unit, 8 open burners, standard oven, storage base	302,000	240,000
G48-8CS	48" (1219mm) nominal size unit, 8 open burners, convection oven, storage base	302,000	240,000
G48-8LL	48" (1219mm) nominal size unit, 8 open burners, 2 space saver ovens	328,000	264,000
G60-10SS	60" (1524mm) nominal size unit, 10 open burners, storage base	330,000	260,000
G60-10RS	60" (1524mm) nominal size unit, 10 open burners, standard oven, storage base	368,000	292,000
G60-10CS	60" (1524mm) nominal size unit, 10 open burners, convection oven, storage base	368,000	292,000
G60-10CR	60" (1524mm) nominal size unit, 10 open burners, standard oven, convection oven	406,000	324,000
G60-10RR	60" (1524mm) nominal size unit, 10 open burners, 2 standard ovens	406,000	324,000
G60-10CC	60" (1524mm) nominal size unit, 10 open burners, 2 convection ovens	406,000	324,000
G60-6R24SS	60" (1524mm) nominal size unit, 6 open burners, 24" (61mm) raised griddle/broiler, storage base	231,000	189,000
G60-6R24RS	60" (1524mm) nominal size unit, 6 open burners, 24" (61mm) raised griddle/broiler, standard oven, storage base	269,000	221,000
G60-6R24CS	60" (1524mm) nominal size unit, 6 open burners, 24" (61mm) raised griddle/broiler, convection oven, storage base	269,000	221,000
G60-6R24CR	60" (1524mm) nominal size unit, 6 open burners, 24" (61mm) raised griddle/broiler, standard oven, convection oven	307,000	253,000
G60-6R24RR	60" (1524mm) nominal size unit, 6 open burners, 24" (61mm) raised griddle/broiler, 2 standard ovens	307,000	253,000
G60-6R24CC	60" (1524mm) nominal size unit, 6 open burners, 24" (61mm) raised griddle/broiler, standard oven, 2 convection ovens	307,000	253,000

Rates are for installations up to 2000' (610m) above sea level

US Range U Series Restaurant Ranges (2007 – Sit Control)

Clearances

Clearances Applicable For All Models		
Surface	**Sides**	**Rear**
Combustible Wall Minimum	12" (305mm)	6" (152mm)
Non-Combustible Wall Minimum	0"	0"

Gas Pressures

Gas	Minimum Supply Pressure	Manifold Operating Pressure
Natural	7" WC (17.5 mbar)	4.5" WC (11.25 mbar)
Propane	11" WC (28 mbar)	10" WC (25 mbar)

Gas Inlet Size

Model Width	Connection
24" (610mm) & 36" (914mm)	3/4" NPT Rear Gas Connection
48" (1219mm) & 60" (1524mm)	1" NPT Rear Gas Connection

Individual Burner Input Rates

Burner	Input BTU/HR	
	Natural Gas	Propane Gas
Open Top	32,000	26,000
Hot Top Burner (In lieu of 2 open top burners)	20,000	19,000
Griddle Burner (In lieu of 2 open top burners)	20,000	19,000
Raised Griddle Broiler (Consists of 3 burners)	33,000	33,000
Oven Burner Standard or Convection	38,000	32,000
Space Saver Oven	32,000	28,000

Rates are for installations up to 2000' (610m) above sea level

Base Model Designations & Total Input Rates

Model #	Description	Input BTU/Hr	
		Natural Gas	Propane Gas
U24-4S	24" (610mm) nominal size unit, 4 open burners, storage base	128,000	104,000
U24-4L	24" (610mm) nominal size unit, 4 open burners, space saver oven	160,000	132,000
U36-6S	36" (914mm) nominal size unit, 6 open burners, storage base	192,000	156,000
U36-6R	36" (914mm) nominal size unit, 6 open burners, standard oven	230,000	188,000
U36-6C	36" (914mm) nominal size unit, 6 open burners, convection oven	230,000	188,000
U48-8SS	48" (1219mm) nominal size unit, 8 open burners, storage base	256,000	208,000
U48-8RS	48" (1219mm) nominal size unit, 8 open burners, standard oven, storage base	294,000	240,000
U48-8CS	48" (1219mm) nominal size unit, 8 open burners, convection oven, storage base	294,000	240,000
U48-8LL	48" (1219mm) nominal size unit, 8 open burners, 2 space saver ovens	320,000	264,000
U60-10SS	60" (1524mm) nominal size unit, 10 open burners, storage base	320,000	260,000
U60-10RS	60" (1524mm) nominal size unit, 10 open burners, standard oven, storage base	358,000	292,000
U60-10CS	60" (1524mm) nominal size unit, 10 open burners, convection oven, storage base	358,000	292,000
U60-10CR	60" (1524mm) nominal size unit, 10 open burners, standard oven, convection oven	396,000	324,000
U60-10RR	60" (1524mm) nominal size unit, 10 open burners, 2 standard ovens	396,000	324.000
U60-10CC	60" (1524mm) nominal size unit, 10 open burners, 2 convection ovens	396,000	324,000
U60-6R24SS	60" (1524mm) nominal size unit, 6 open burners, 24" (61mm) raised griddle/broiler, storage base	225,000	189,000
U60-6R24RS	60" (1524mm) nominal size unit, 6 open burners, 24" (61mm) raised griddle/broiler, standard oven, storage base	263,000	221,000
U60-6R24CS	60" (1524mm) nominal size unit, 6 open burners, 24" (61mm) raised griddle/broiler, convection oven, storage base	263,000	221,000
U60-6R24CR	60" (1524mm) nominal size unit, 6 open burners, 24" (61mm) raised griddle/broiler, standard oven, convection oven	301,000	253,000
U60-6R24RR	60" (1524mm) nominal size unit, 6 open burners, 24" (61mm) raised griddle/broiler, 2 standard ovens	301,000	253,000
U60-6R24CC	60" (1524mm) nominal size unit, 6 open burners, 24" (61mm) raised griddle/broiler 3 convection ovens	301,000	253,000

Rates are for installations up to 2000' (610m) above sea level

Sunfire X Series Restaurant Ranges (2007 – Sit Control)

Clearances

Clearances Applicable For All Models		
Surface	**Sides**	**Rear**
Combustible Wall Minimum	12" (305mm)	6" (152mm)
Non-Combustible Wall Minimum	0"	0"

Gas Pressures

Gas	Minimum Supply Pressure	Manifold Operating Pressure
Natural	7" WC (17.5 mbar)	4.5" WC (11.25 mbar)
Propane	11" WC (28 mbar)	10" WC (25 mbar)

Gas Inlet Size

Model Width	Connection
24" (610mm) & 36" (914mm)	3/4" NPT Rear Gas Connection
60" (1524mm)	1" NPT Rear Gas Connection

Individual Burner Input Rates

Burner	Input BTU/HR	
	Natural Gas	Propane Gas
Open Top	30,000	26,000
Hot Top Burner (In lieu of 2 open top burners)	20,000	19,000
Griddle Burner (In lieu of 2 open top burners)	20,000	19,000
Raised Griddle Broiler (Consists of 3 burners)	33,000	33,000
Oven Burner Standard	33,000	29,000
Space Saver Oven	25,000	25,000

Rates are for installations up to 2000' (610m) above sea level

Base Model Designations & Total Input Rates

Model #	Description	Input BTU/Hr	
		Natural Gas	Propane Gas
X24-4S	24" (610mm) nominal size unit, 4 open burners, storage base	120,000	104,000
X24-4L	24" (610mm) nominal size unit, 4 open burners, space saver oven	145,000	129,000
X36-6S	36" (914mm) nominal size unit, 6 open burners, storage base	180,000	156,000
X36-6R	36" (914mm) nominal size unit, 6 open burners, standard oven	213,000	185,000
X60-10SS	60" (1524mm) nominal size unit, 10 open burners, storage base	300,000	260,000
X60-10RS	60" (1524mm) nominal size unit, 10 open burners, standard oven	333,000	289,000
X60-10RR	60" (1524mm) nominal size unit, 10 open burners, 2 standard ovens	366,000	318,000
X60-6R24SS	60" (1524mm) nominal size unit, 6 open burners, 24" (61mm) raised griddle/broiler, storage base	203,000	189,000
X60-6R24RS	60" (1524mm) nominal size unit, 6 open burners, 24" (61mm) raised griddle/broiler, standard oven, storage base	246,000	218,000
X60-6R24RR	60" (1524mm) nominal size unit, 6 open burners, 24" (61mm) raised griddle/broiler, 2 standard ovens	279,000	247,000

Rates are for installations up to 2000' (610m) above sea level

Garland Restaurant Series

Top Section		Base	Models
	2 x 12" Sections 24" Wide	(1) Space Saver Oven	G28, H28, P28
		(1) Storage Base	G28S, H28S, P28S
	3 x 12" Sections 36" Wide	(1) Standard Oven	286, 386, G286, GV286, H286, P286
		(1) Range Base Convection Oven	G286RC, H286RC, P286RC
		(1) Storage Base	G286S, H286S, P286S
	4 x 12" Sections 48" Wide	(2) Space Saver Ovens	G288, H288, P288
		(1) Std. Oven & (1) Storage Base	G288S, H288S, P288S
		(1) Convection Oven	G288RC, H288RC, P288RC
	5 x 12" Sections 60" Wide	(2) Std. Ovens	284, 384, G284, GV284, H284, P284
		(1) Std. Oven & (1) Storage Base	287, 387, G287, H287, P287
		(1) Std. Oven & (1) Convection Oven	G284RC, H284RC, P284RC
		(2) Convection Oven	G284RC2, H284RC2, P284RC2
24" Raised Griddle/Broiler	60" Wide 6 Burner	(2) Std. Ovens	283, 383, G283, GV283, H283, P283
		(1) Std. Oven & (1) Storage Base	282, 382, G282, H282, P282
		(1) Std. Oven & (1) Convection Oven	G283RC, H282RC, P283RC
		(2) Convection Ovens	G283RC2, H283RC2, P283RC2
36" Raised Griddle/Broiler	60" Wide 4 Burner	(2) Std. Ovens	285, 385, G285, H285, P285
		(1) Std. Oven & (1) Storage Base	281, 381, G281, H281, P281
		(1) Std. Oven & (1) Convection Oven	G285RC, H285RC, P285RC
		(2) Convection Oven	G285RC2, H285RC2, P285RC2
	6 x 12" Sections 72" Wide 12 Burner	(2) Std. Ovens	G289, H289, P289
		(1) Std. Oven (1) Storage Base	G289S, H289S, P289S
		(1) Std. Oven & (1) Convection Oven	G289/RC, H289RC, P289RC
		(2) Convection Ovens	G289RC2, H289RC2, P289RC2
	4 Burner 30" Wide	(1) Standard Oven	G-30, G-30A

Minimum Supply Pressure::	Manifold Operating Pressure:
NAT - 7" WC	NAT - 4.5" WC
PRO - 11" WC	PRO - 10" WC

Garland Heavy Duty
Master Series Model Numbers

Prefix Definitions		Suffix Definitions	
M	Master	E	Electric Spark Pilot Ignition
MS	Master Sentry c/w open top pilot shut off	B	Broiler
MST	Master Sentry Cc/s total flame failure	T	Modular Top Section
		S	Storage cabinet under top section
		RC	Range with convection oven
		RC	Rang with standard oven

Model	Width	Description
M,MS, MST42R(E)	34	Range with oven, 2 open top burners & a 17" wide sold hot plate or optional griddle
M,MS, MST42RC(E)	34	Range with convection oven, 2 open top burners & a 17" wide solid hot plate or optional griddle
M,MS, MST42S(E)	34	Range with storage compartment, 2 open top burners & a 17" wide solid hot plate or optional griddle
M,MS, MST42T(E)	34	Modular top, 2 open top burners & a 17" wide sold hot plate or optional griddle
M,MS, MST43R(E)	34	Range with oven and six open top burners
M,MS, MST43RC(E)	34	Range with convection oven and six open top burners
M,MS, MST43S(E)	34	Range with storage compartment and six open top burners
M,MS, MST43T(E)	34	Modular top with six open top burners
M,MS,MST44R(E)	34	Range with oven and four open top burners
M,MS,MST44RC(E)	34	Range with convection oven and four open top burners
M,MS,MST44S(E)	34	Range with storage base and four open top burners
M,MS,MST44T(E)	34	Modular top with four open top burners
M,MS,MST45R(E)	34	Range with oven and two 17" wide spector-heat plate sections
M,MS,MST45RC(E)	34	Range with convection oven and two 17" wide spector-heat plate sections
M,MS,MST45S(E)	34	Range with storage compartment and two 17" wide spector-heat plate sections
M,MS,MST45T(E)	34	Modular top with two 17" wide spector-heat plate sections
M,MS,MST46R(E)	34	Range with oven and two 17" wide even heat hot top sections
M,MS,MST46RC(E)	34	Range with convection oven and two 17" wide even heat hot top sections
M,MS,MST46S(E)	34	Range with oven storage compartment and two 17" wide even heat hot top sections
M,MS,MST46T(E)	34	Modular top with two 17" wide even heat hot top sections
M,MS,MST47R(E)	34	Range with oven and 34" wide valve controlled griddle
M,MS,MST47RC(E)	34	Range with convection oven and 34" wide valve controlled griddle
M,MS,MST47S(E)	34	Range with storage base and 34" wide valve controlled griddle
M,MS,MST47T(E)	34	Modular top with 34" wide valve controlled griddle
M48R(E)	34	Range with oven and 34" wide thermostatically controlled griddle
M48RC(E)	34	Range with convection oven and 34" wide thermostatically controlled griddle
M48S(E)	34	Range with storage base and 34" wide valve controlled griddle controlled griddle
M48T(E)	34	Modular top with 34" wide thermostatically controlled griddle
M,MS,MST54R(E)	34	Range with oven, two open top burners & a 17" wide spectro-heat section
M,MS,MST54RC(E)	34	Range with convection oven, two open top burners & a 17" wide spectro-heat section
M,MS,MST54S(E)	34	Range with storage base, two open top burners & a 17" wide spectro-heat section
M,MS,MST54T(E)	34	Modular top with two open top burners & a 17" wide spectro-heat section
M,MS,MST5S	17	Range 17" wide storage base and spectro-heat section
M,MS,MST5T	17	Modular top with 17" spectro-heat section
M,MS,MST4S(E)	17	Range with storage base and two open top burners
M,MS,MST4T(E)	17	Modular top with two open top burners
M,MS,MST6S(E)	17	Range with storage base and 17" wide even heat hot top
M,MS,MST6T(E)	17	Modular top with 17" wide even heat hot top
M,MS,MST7S(E)	17	Range with storage base and 17" wide valve controlled griddle
M,MS,MST7T(E)	17	Modular top with 17" wide valve controlled griddle
M,MS,MST8S	17	Range with storage base and 17" wide thermostatically controlled griddle
M,MS,MST8T	17	Modular top with 17" wide thermostatically controlled griddle
M,MS,MST17B(E)	17	17" wide char-broiler

Model	Width	Description
M,MS,MST24B(E)	24	24" wide char-broiler
M,MS,MST34B(E)	34	34" wide char-broiler
M35	17	Deep fat fryer
M70	24	Deep fat fryer

Minimum Supply Pressure:	Manifold Operating Pressure:
NAT – 7" WC	NAT – 6" WC
PRO – 11" WC	PRO 10" WC

Garland 40 Series Heavy Duty

Suffix Definitions	
R	Standard oven base
RC	Convection oven base
S	Storage base
SD	Storage base with doors
T	Modular top/Table top
FT	Front open burner, rear hot top
G	Griddle
GTH	Thermostatically controlled griddle

Minimum Supply Pressure:	Manifold Operating Pressure:
NAT – 7" WC	NAT – 6" WC
PRO – 11" WC	PRO 10" WC

Model	Width	Description
42-40R	34"	17" Valve controlled griddle on the left and 2 open top burners w/standard oven
42-40R-6	34"	17" even heat hot top on the left and 2 open top burners w/standard oven
42-40R-5	34"	17" spectro-heat plate and 2 open burners
43-40R	34"	6 open top burners with standard oven
43-40FTR	34"	3 open burners front and 3 hot tops rear with standard oven
43-40R-34G	34"	34" Valve controlled griddle with standard oven
44-40R	34"	4 open top burners with standard oven
44-40FTR	34"	2 open top burners front and 2 hot tops rear with standard oven
45-40R	34"	Two 17" spectro-heat plate sections with standard oven
46-40R	34"	Two 17" even heat plate sections with standard oven
47-49R	34"	34" valve controlled griddle with standard oven - US built only
48-49R	34"	34" thermostatically controlled griddle with standard oven - US built only
40-4S	17"	2 open top burners with storage base
40-5S	17"	17" spectro-heat plate with storage base
40-6S	17"	17" even heat plate with storage base
40-7S	17"	17" valve controlled griddle with storage base
40-8S	17"	17" thermostatically controlled griddle with storage base
2-40	34"	Double stacked standard oven

Oven Burner	40,000 BTU/Hr (Standard and RC ovens)
Open Burner	14,000 BTU/Hr each 12" section (ex. 43-40R)
	14500 BTU/Hr for units built in Mississauga
Open Burner	20,000 BTU/Hr each 17" section (ex. 44-40R)
Spectro-heat burner	15,000 BTU/Hr each burner, 45,000 BTU/Hr per 17" section
Even Heat Hot Top	30,000 BTU/Hr each burner US built - 27,000 built in Mississauga
Griddle Burner	30,000 BTU/Hr each burner (valve and thermostatically controlled griddles
	27,000 BTU/Hr each burner for units built in Mississsauga

US Range Restaurant Series Model Numbers

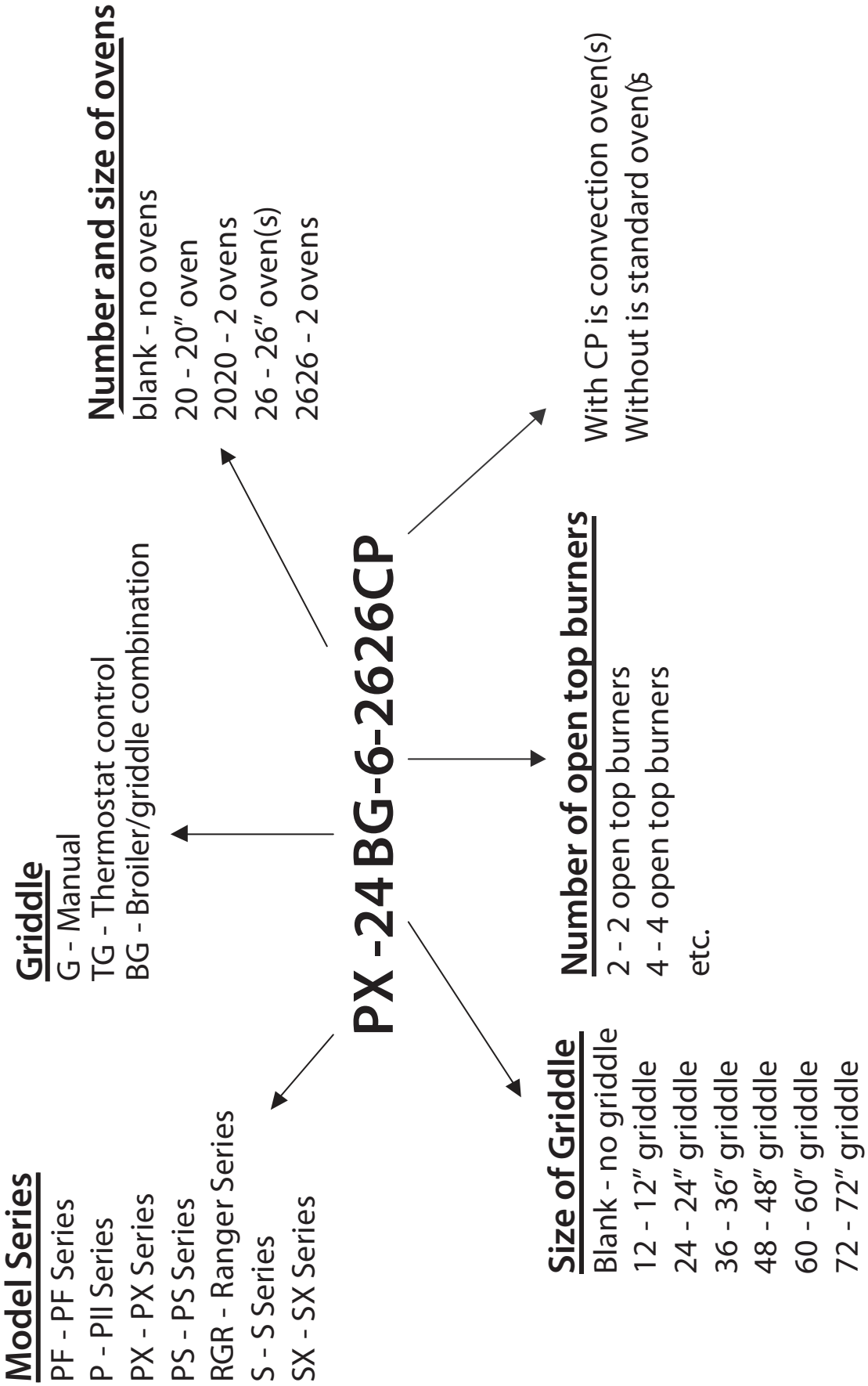

US Range Heavy Duty Cuisine Series Models

Model Number	12" Open Burner Section	18" Open Burner Section	18" Fry Top Griddle	24" Fry Top Griddle	36" Fry Top Griddle	12" Even Heat Hot Tops	18" Even Heat Hot Tops	18" Spectro Heat Hot Tops	12" or 18" French Top Section
836-1					1 Section				
836-1-1					1 Section				
836-2	1 Section			1 Section					
836-3				1 Section		1 Section			
836-4		1 Section	1 Section						
836-5			1 Section				1 Section		
836-6	3 Sections								
836-7		2 Sections							
836-8						3 Sections			
836-9							2 Sections		
836-10								2 Sections	
836-11							1 Section	1 Section	
836-12	1 Section					2 Sections			
836-13	2 Sections					1 Section			
836-14		1 Section					1 Section		
836-15	3 Sections Front								3 Sections Back
836-16		2 Sections Front							2 Sections Back
836-17		1 Section						1 Section	

BTU Ratings		Natural Gas	Propane Gas
Oven Burner	Standard	40,000 BTU/Hr	35,000 BTU/Hr
	Convection	37,000 BTU/Hr	37,000 BTU/Hr
Open Top Burner (2 Burners)	Each Burner	30,000 BTU/Hr	28,000 BTU/Hr
Even Heat Hot Top Burner	12" Section	25,000 BTU/Hr	25,000 BTU/Hr
	18" Section	35,500 BTU/Hr	35,500 BTU/Hr
Spectro Heat Burner	18" Section	12,500 BTU/Hr	
French Top	Front Open Top	30,000 BTU/Hr	28,000 BTU/Hr
	Rear Hot Top	15,000 BTU/Hr	15,000 BTU/Hr

All model numbers are based on a 36" width unit.
Models 836 are 36" in depth
Models 841 are 41" in Depth
Models with a C prefix built in Mississauga plant
Models with a 0 prefix indicate with out oven
Models with M suffix indicates modular top
Models with a C suffix indicate a convection oven

Supply Pressure	NAT – 7" WC	PRO – 11" WC
Operating Pressure	NAT – 6" WC	PRO 10" WC

Garland

U.S. Range

Section 2

Serial Number Identification

Serial Number Identification

Manufacturing Date Codes

Table 1

G = 1986	01 = January
H = 1987	02 = February
J = 1988	03 = March
K = 1989	04 = April
L = 1990	05 = May
M = 1991	06 = June
N = 1992	07 = July
O = 1993	08 = August
P = 1994	09 = September
Q = 1995	10 = October
R = 1996	11 = November
S = 1997	12 = December
T = 1998	
U = 1999	
V = 2000	
W = 2001	
X = 2002	
Y = 2003	
Z = 2004	

Serial numbers are useful in determining the age of the equipment and if it is under warranty. In some cases, the serial number is describes as a code or W/N for warranty number.

Garland used manufacturing date codes in addition to serial numbers. Before 1986, the manufacturing code was always F01. This indicated it was built in
Factory #1 and had no chronological meaning. Starting in 1986, these codes represented the date of manufacture. The alphabetical character indicates the year and the two digits indicate the month. See Table 1 for a listing of years and months assigned.

Older Garland Serial Numbers

Equipment built in the Garland Freeland, Pa. plant used a six digit serial number up to the mid 1990's In table 2, you will be able to tell approximately when the appliance was built.

Table 2

NUMBER	DATE	NUMBER	DATE	NUMBER	DATE
033000	6/1974	160000	4/1985	335000	4/1991
035000	10/1974	170000	9/1985	340000	6/1991
040000	5/1975	180000	3/1986	345000	10/1991
045000	1/1976	190000	9/1986	350000	1/1992
050000	8/1976	200000	11/1986	355000	5/1992
055000	3/1977	210000	3/1987	360000	8/1992
060000	10/1977	220000	7/1987	365000	10/1992
065000	4/1978	230000	10/1987	370000	1/1993
070000	10/1978	240000	3/1988	375000	5/1993
075000	5/1979	250000	6/1988	380000	8/1993
080000	11/1979	260000	10/1988	385000	11/1993
090000	10/1980	280000	1/1989	390000	1/1994
100000	7/1981	280000	5/1989	395000	5/1994
110000	3/1982	290000	9/1989	40000	7/1994
120000	1/1983	300000	1/1990	41000	11/1994
130000	8/1983	310000	5/1990	42000	1/1995
140000	3/1984	320000	9/1990	42500	7/1995
150000	8/1984	330000	1/1991	43000	11/1995

Interim Garland Serial Numbers (1998-2007)

In January 1993, a revised serial number for Garland products was implemented. Our sister company Frymaster used this system and Garland adapted it for its own use. The following is a break down of this format with the product codes.

S/N 9301PC0001

93 = Year Built	01 = Month Built	PC = Product Code	0001 = Sequential number of unit built that month

In some cases, you will find the serial number ending with an R, i.e. 9904RG002R. This indicated that the unit was built in our Mississauga Plant. The R was removed in 2002 and switched to the 4 digits after the product code.

In table 3, you will find a listing of Garland product codes.

Table 3

CE	ED Series Fryer, Broiler, Griddle Hot Plate and Food Warmer	HE	10 Series, 10-31/70 Fryer
CG	G22 Series Fryer, Griddle, Hot Plate, G24 Series Griddle, Hot Plate, GD Series Broiler, Griddle, CG/GAW Chain Griddles	ME	E18 Series, E24 Series, Hot Food Well, Heat Lamp
CU	Coffee Urns, New US Range Cuisine Series (C836)	OE	TE3, TE4, TE2A Electric Convection Ovens , 2000 Series Deck Ovens, Pizza Ovens
PC	Pronto	OG	TG3, TG4, TG2A Gas Convection Ovens G2000 Series Bake and Roast Ovens, G48P Oven
GR	H/P 280 Series when they were built in Freeland, Pa	RE	680 Series, E20 Stock Pot, ERC, ER-10 Series Broilers, 680 Series Broilers
BG	G80 Series Charbroiler SRC, SRC16-40, 280 Series Broiler, Residential BBQ	TP	F30/F40E & G Frypan Skillets
HG	Master Series, 40 Series, Old US Range Cuisine (836), 35/70 Series Fryer, 80B Broiler	TS	SEL/S Cleveland Frypan, SET-10, SET-15 Skillets
RG	G280 Series, G28, G34, S/ST280 Series, H/HP280 Series, 35-280 Fryer, Bistro Series, G20 Stock Pot, Old US Range Cuisine (836)	RR	Residential Range Hoods, Residential Ranges RCS30, R30, R280
PR	US Range Performer Range	CJ	Convection Ovens, Garland MCO, ICO, ECO, BCO, US Range Series SDG, CG-100, DG-100
AG	G56P/B Air Deck	AO	APO Oven

US Range Serial Numbers

Older Serial Numbers		Newer Serial Numbers
W048968724	45729A001D95	9801PR0000
04 = Month Built 89 = Year Built 24 = Number of units built	45729 = Sales order # A = Product Line Code 001 = Number of units built D = Month Built 95 = Year Built	Same as current Garland Serial Numbers

Currant Serial Number

As of 2007 all Garland/US Range serial numbers no longer contain a product code, this includes the 2007 Restaurant Ranges (Sit Control). The number is now all numbers consisting of Year, Month and sequence number.

Garland

U.S. Range

Section 3

Certification Markings

Certification Markings

There are many marks used on equipment manufactured and distributed by Garland. Below is a summary of what the marks are and where they are used.

Sanitation Mark

All equipment sold in the USA requires a mark to show that is complies with ANSI/NSF Standards 2 & 4. These standards concern material and their suitability for food contact, food hygiene and minimum safe operating temperatures, and construction prohibiting gaps where bacteria can grow or vermin can inhabit. Garland predominantly uses NSF for certification to these ANSI/NSF 2 & 4 standards and apply the NSF mark to the equipment. This mark is either found on the rating plate or as a separate blue sticker on the front of the unit.

UL is now offering their own sanitation mark as shown in the two examples above. Products displaying these marks are tested to the same NSF standards. At this time the UL sanitation marks are not as well recognized as the NSF and we will continue to use the NSF mark for now.

Although a sanitation mark is not required in Canada, there are certain areas where the Canadian Food Inspection Agency (CFIA) may have a requirement. Typically they get involved with equipment sold to meat processing plants. In this case, CIFA will accept proof of NSF listing.

Electric Cooking Equipment

CSA – There are many marks for electric cooking equipment. Most of the equipment produced at GCR bears the CSA C/US mark. The CSA mark is for Canada only. These marks indicate that all testing was
performed / witnessed by CSA and has been tested to the appropriate CSA and UL Standards

ETL – Some of our distributed electrical equipment, such as induction units bear the ETL mark. The ETL mark used is typically the ETL C/US mark, with the C and US at the 8 and 4 o'clock positions similar to the CSA mark. This mark indicates that all testing was
performed / witnessed by Interek Testing Services and has been tested to appropriate CSA and UL Standards.

UL – Equipment manufactured at GCI bears the UL, cUL marks for the USA and Canada respectively, we can also consolidate these marks into one mark UL C/US LISTED mark. These marks indicate that all testing was performed / witnessed by Underwriters Laboratories and has been tested to the appropriate CSA and UL standards.

Gas Cooking Equipment

CSA Blue Star – All gas equipment manufactured at GCR and some at GCI carry the CSA Blue Star Mark. This shows that the equipment plus its electrical features are approved to the US standards and can be sold in the USA only. Equipment bearing this mark is certified to the harmonized ANSI Z83.11/CGA 1.8 standard.

CSA Blue Flame – All gas equipment manufactured at GCR and some at GCI carry the CSA Blue Flame Mark. This shows that the equipment plus its electrical features are approved to Canadian standards and can be sold in Canada only. Equipment bearing this mark is certified to the harmonized ANSI Z83.11/CGA 1.8 standard plus some additional requirements from standard CSA No. # 3.

UL Gas-Fired – Some gas equipment manufactured by GCI bears the UL GAS-FIRED mark. There are three types of mark, UL, $_{C}$UL and $_{C}$UL$_{US}$; the marks are for the US, Canada and, Canada/US respectively. Equipment bearing this mark is certified to the harmonized ANSI Z83.11/CGA 1.8 standard.

Note: when you look at all the marks used in the Garland group, you will notice that GCR uses only CSA and GCI uses predominantly UL. The reason for this comes down to two reasons.

1. Geography – CSA is located in Toronto and very close to GCR. This helps keep approval costs to a minimum and improves response time for CSA.

   UL is located in Mellville, NY, which is only two hours away from GCI. UL is used because of their relatively close proximity to GCI.

2. Relationships – GCR and GCI have close relationships with CSA and UL respectively. Over time a level of trust has developed between Garland and the certifying bodies. Making the approval process run very smoothly

Garland

U.S. Range

Section 4

Properties And Characteristics of Fuel Gases

Properties And Characteristics Of Fuel Gases

The petroleum gases most commonly used in the gas industry are natural gas and it two processed derivatives, propane and butane. The two most commonly used fuels in commercial cooking equipment are natural gas and propane. The major ingredient in fuel gas in methane.

Natural Gas

Natural gas exists because of a naturally occurring mixture of Hydrogen (H) and Carbon (C) and small amounts of other gases. Since natural gas is made up mostly of methane, it is usually represented by the chemical formula CH_4.

Propane

LP gases (Liquid petroleum gases) are hydrocarbons that are refined, stored and transported as liquid under pressure. Your BBQ propane tank is an example of how this gas is stored as a liquid. It then vaporized into a fuel gas when it is released for use in a gas-burning appliance. LP gas is extracted from both oil and natural gas. Under normal atmospheric temperature and pressure, propane is a gas. At cooler temperatures and at higher pressures, it is easily changed to a liquid form. Propane is represented by the chemical formula C_3H_8.

General Properties

Natural gas and propane are nontoxic, tasteless, colorless, invisible and odorless. Since they are undetectable, for safety, an odorant known as mercaptan must be added to the natural and propane gas. Mercaptan lets the user know that gas has escaped. Approximately one pound of mercaptan is added to every million cubic feet of gas.

There are other properties of natural and propane gas that you should be aware of. They are specific gravity, expansion factors, boiling point and calorific value of natural and propane gas.

Specific Gravity

Also known as relative density, specific gravity is the comparison between the weight of the volume of vapor or liquid and the weight of an equal volume of air or water.

Specific Gravity of Vapor Gases

To be able to compare the specific gravity of air and gas, both must be at the same pressure and temperature. Air has a specific gravity of 1.0. Natural gas had a specific gravity of 0.6. Natural gas is lighter than air and will rise to the ceiling when there is a leak. Propane gas has a specific gravity of 1.52 compared to and will usually settle in low areas.

Specific Gravity of LP

When compared to water LP has a specific gravity of 0.51. Propane is lighter than water and if it were to be spilled in a liquid form on water, it would float on the surface.

Expansion Factors

When the temperature of a liquid increases, it causes the liquid to expand, causing the volume of the liquid to increase as well.

Your propane tank at home is usually only filled to 80% of its capacity to allow for expansion. The space between the liquid and top of the tank is replaced by vapor, which you use as propane gas. The pressure caused by the molecular movement of LP gas vapors is called vapor pressure. When you remove this vapor from the container, it lowers the vapor pressure, it causes the remaining liquid gas to boil and replace the vapor. This stabilizes the reduced pressure in the tank.

When a fuel changes from a liquid to a gas, expansion takes place. Each gas has a different ratio of expansion. Natural gas expands at a ratio of 600:1 and propane at a ratio of 270:1 at atmospheric pressure.

Boiling Point

The pressure of a tank is determined by the temperature of the liquid inside it. At atmospheric pressure, natural gas has a boiling point of -258°F. Propane has a boiling temperature of -44°F.

Natural gas is almost always provided by a utility company in the form of gas but the utility company may store it liquefied.

If the temperature of a fuel gas is lowed below its boiling point, it will not vaporize and no vapor pressure will develop. The boiling in a tank only stops when the vapor pressure is high enough to suppress the boiling of the liquid at that particular temperature in the tank. This pressure only varies with the temperature not with the liquid content of the cylinder tank. The pressure in a cylinder is at the same pressure whether the tank is 20% or 70% full.

Calorific Value (Heat Content)

The calorific value of a fuel is also known as the heat content. It is described as the energy released when a given volume of fuel is burned. The unit of measure commonly used is British Thermal Units per cubic foot (BTU/ft^3). A BTU is the amount of heat required to raise the temperature of 1 pound of water 1° F.
The calorific value of natural gas varies because of different components of the natural gas that my be present. The general value used in industry is
1000 BTU/ft^3 for natural gas and 2520 BTU/ft^3 vaporized.

When calculating the input rate of an appliance, the calorific value of the gas is taken into consideration.

Garland

U.S. Range

Section 5

Operation Of Controls

Operation Of Controls

CAUTION: Gas will flow to top burners even with the top pilots out. Gas will not be interrupted. It is the responsibility of the operator to check the ignition of the burners. ***SHOULD IGNITION FAIL AFTER 10 SECONDS, TURN THE BURNER VALVE OFF AND WAIT 5 MINUTES AND TRY AGAIN.***

Open Top Burners

All models where applicable, i.e H286, 43-40R, 44-40RC.

1. Remove top grates and ring grates.
2. Check flash tubes to see that they are properly positioned on burner change ports.
3. Light Pilots.
4. Replace top grates and ring grates.

Models after 11/2007 where applicable, i.e. G, U, X Series with SIT control.

1. Remove both pieces of the two piece grates.
2. Light Pilots.

3> Replace both pieces of the two piece grates.

All Models: Turn the valve completely on. The burner flame should be 1/2" stable blue flame and should impinge on the underside of a pot placed on the ring grate.

Shut Down

1. Turn all valves to the "OFF" position.
2. If the unit is to be shut down for an extended period of time, close the in line gas valve.

Hot Top Sections

All models where applicable, i.e. H286-1, P284-3, 40-40S, 43-40-1R, 42-40RC, G, U, X Series with SIT control

1 Raise or remove hot top sections. Each burner has one pilot located at the front right side of the burner.

2. Light the pilots. The pilot burner should be adjusted to provide for rapid ignition on the burner.
3. Turn the burner valve on. A sharp blue flame should be approximately 1/4" high.

4 Replace hot top sections.

Thermostatic Controlled Griddles

1. Raise the griddle at the front and block.
2. Light the pilots located at the front right side of each burner.
3. Sensing bulbs must be fully inserted into their individual holders which are located on the underside of the griddle.
4. Set the thermostat to maximum, one at a time. The burner should have a 5/16" stable flame.
5. Lower the griddle carefully into position taking extreme caution not to leave any part of the capillary tube in the burner compartment.

Thermostatic Controlled Griddles (SIT)

Refer to the Sit control Oven Pilot lighting procedure later in this section. The griddle procedure is the same as the oven.

Valve Controlled Griddles

1. Raise the griddle at front and block.
2. Light the pilots located at the front right side of each burner.
3. Turn the burner valves on to full position. Burners should have a 1/2" to 5/8' stable blue flame.
4. Lower the griddle into position.

Raised Griddle/Broiler

(H/P283, 282, 285, 281)

Before turning the main gas supply on, make sure all valves are in the off position.

1. Light the pilots located in the broiler section. The left pilot is a tee (double pilot) to control the left and center burners. The right pilot controls the right burner.
2. Turn the valves completely on. The burner should have a 5/16" stable blue flame.

All units are tested and adjusted at the factory, however, burner and pilots should be check at the time of installation and adjusted if necessary.

Standard Oven

Lighting

1 Remove oven buttons.

2. Depress and hold the reset button (Red) located at the lower front of the oven (beneath the oven door) while lighting the oven pilot. Continue to depress the rest button for 60 seconds. Release the button, if the pilot does not stay lit, repeat this procedure after 5 minutes

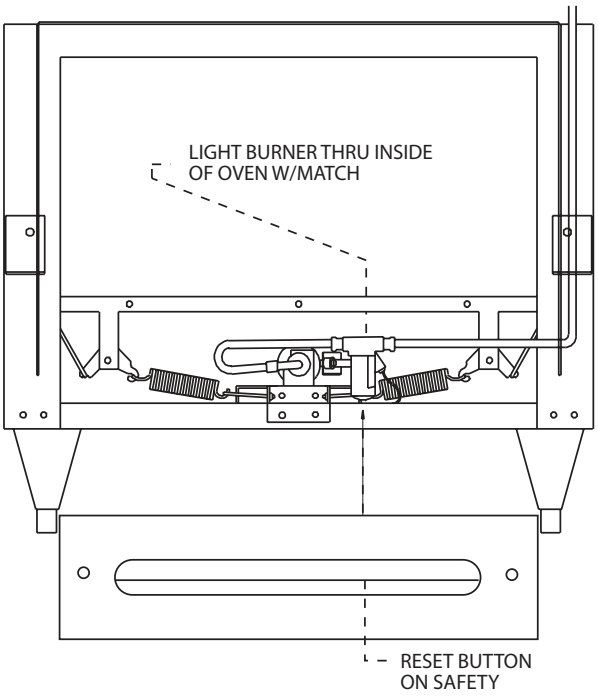

Shut down

1. Turn all valves and thermostats to the off position.

2. If a range is to be shut down for an extended period of time, close the in line gas valve.

Relighting

1 Shut all gas valves off.

2. Wait 5 minutes.

3. Repeat lighting instructions in section "A" above.

G, U, X Restaurant Ranges (Sit Control)

Lighting

1. Push in the SIT control knob.

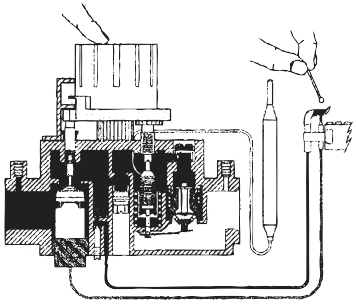

While holding the valve knob fully in, press the ignitor button and light the oven pilot.

2. When the pilot is lit, continue to hold the valve knob fully in for 10 seconds, then release it. If the pilot goes out, wait for five (5), minutes, then repeat step 1.

3. When the pilot has been established, turn the knob counter-clockwise, and align the desired oven temperature to the 12:00 position.

4. To keep the main burner flame off and but the pilot flame lit ,turn the control knob clockwise to the stop position. This knob is configured to leave the pilot on continuously.

5. To shut the pilot completely off, extinguish the pilot flame. The internal pilot valve will automatically close within 60 seconds. Each time this is done, the pilot will have to be re-lit.

NOTE: This procedure is the same for the convection models with SIT controls.

Range Base Convection Ovens "RC"

This section pertains to the forced air unit.

For 115 V usage, a cord and plug are provided but connection to the electrical service must comply with local codes; or in the absence of local codes, with the National Electrical Code, ANS/NFPA No. 70-(current edition).

A wiring diagram is attached to the rear of this unit for your use.

Lighting Instructions

1. Use the access though the louver panel, hold the reset button (RED) located on the oven safety valve.
2. Using the access hole located below the louver in the panel, push the RED IGNITOR BUTTON continuously until the oven pilot ignites.
3. If the pilot does not stay lit after you release the reset button, wait 5 minutes and repeat Step 2 and hold the reset button approximately 60 seconds.

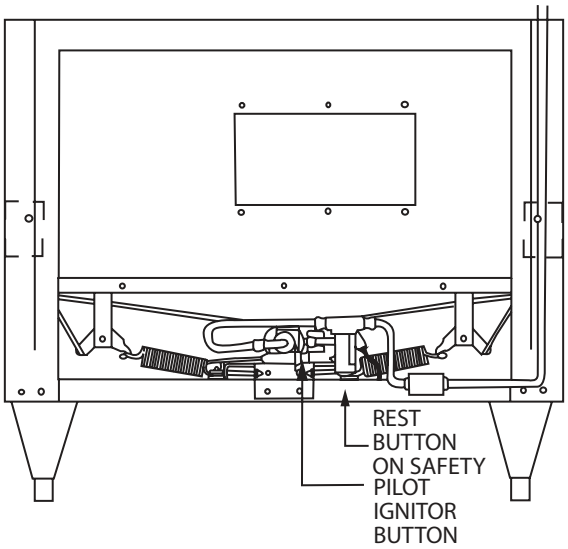

Lighting Instructions

1. Use the access though the louver panel, hold the reset button (RED) location on the oven safety valve. (See prior).
2. Using the access hole located below the louver in the panel, push the RED IGNITOR BUTTON continuously until the oven pilot ignites. (See Prior)
3 If the pilot does not stay lit after you release the reset button, wait 5 minutes and repeat Step 2 and hold the reset button approximately 60 seconds.

Start Up.

1 Activate the power switch to the cook position.
2. Turn the oven valve on. Turn the thermostat to the desired setting.

Cool Down

1. Turn the thermostat and oven valve off.
2. Open the door.
3. Activate the power to the cool down position.

Shut down

1 Turn the thermostat off.
2. Return the power switch to the "OFF" position.
3. Turn the oven valve off

The motor on the range convection oven is maintenance free since it is constructed with sealed ball bearings. It is designed to provide durable service when treated with ordinary care. We have a few suggestions to follow on the care of your motor.

A. **Never** operate the oven without convection oven fan. Use of this oven without the convection fan will cause premature motor failure!

B. When the motor is operating, it cools itself internally by air entering the rear of the motor case, provided proper clearance has been allowed.

C. Since the blower wheel is in the oven cavity, it is at the same temperature as the oven. If the motor is stopped while the oven is hot, the heat from the blower wheel is conducted down the shaft and into the armature of the motor. This action could shorten motor life.

D. We recommend that at the end of the bake or roasting period, when the oven will be idle for any period of time, or before shutting down completely, that the doors be left open, and by use of the cool-down position on the fan switch, the fan continues to run for at least 20 minutes. The "FAN" should never be turned "OFF" when the oven is "HOT".

Garland

U.S. Range

Section 6

Gas Valves And Adjustments

Gas Valves And Adjustments

Pilot Adjustment Valves

- Also known as gum valves.
- Available in single or double.
- Double contains adjustment for an open top burner and oven.
- Adjustable with a set-screw.
- Turn set-screw counter-clockwise to increase flow.
- Turn set-screw clockwise to decrease flow.

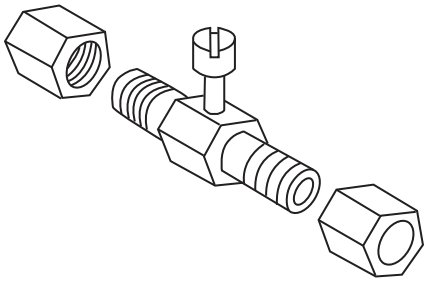

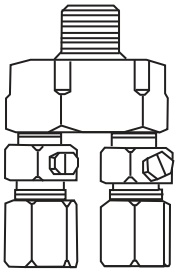

Pilot Adjustment Location

- All pilot adjustments valves are mounted on the range top manifold as illustrated in drawings below.
- Next to the burner control knobs.
- Easily accessible for adjustments using a straight blade pocket screwdriver.

DOUBLE PILOT VALVE

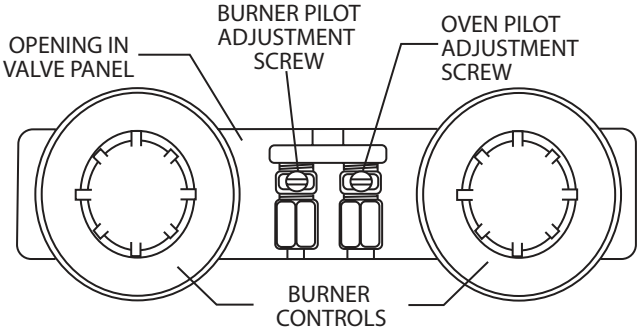

SINGLE PILOT VALVE

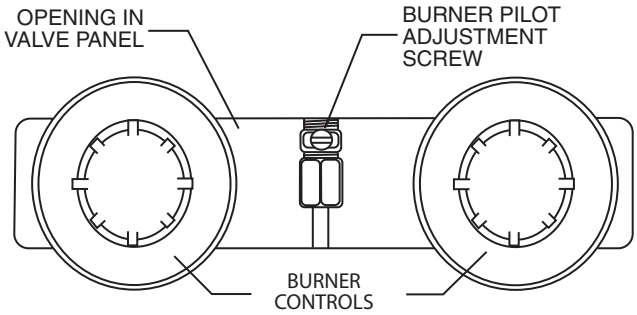

GRIDDLE PILOT VALVE

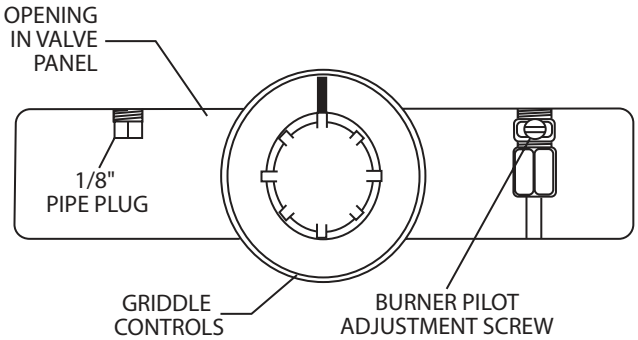

Open Top Burners

If required the open burner pilot should be adjusted so that the tip of the pilot flame reaches the middle of the flash tube opening. This flame may show a slight yellow tip.

Griddle and Hot Tops

The pilot burner for the griddle or hot top burner should provide for a rapid ignition of the burner, but should not impinge on any part of the burner. When properly adjusted, it should neither lift off the burner not should it show a yellow tip.

Oven Pilot

Oven pilots should reach and engulf the tip of the thermocouple as illustrated below. If the pilot flame fully engulfs the thermocouple premature failure will occur.

Oven Pilot

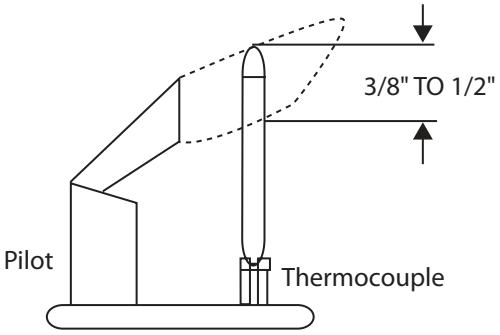

Gas Burner Control Valves

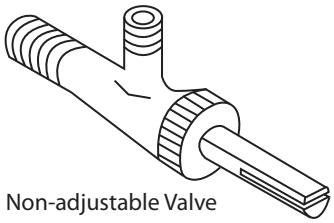

Non-adjustable Valve

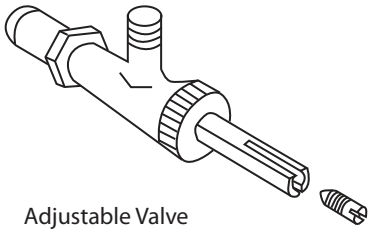

Adjustable Valve

Full Range Non-adjustable Top Burner Valve

- Used for open top burners.
- Regulates the flow of gas to the burner.
- Solid "D" stem, no adjustment screw down the shaft.
- It is a fixed non-adjustable control

Adjustable Hi/Low Top Valve

- Regulates the flow of gas to manual control griddles.
- "D" stem is split containing an adjustable screw for low position.
- Use a straight blade pocket screwdriver to adjust low setting higher or lower.

Reminder! Adjustments on valves are for the low flames setting only.

Full Range Non-Adjustable Control

- Used to control the flow of gas for the oven,
- Used together with the oven thermostat.
- Used fully open or fully closed (no medium setting).
- No adjustments or calibrations.

Combination Valve

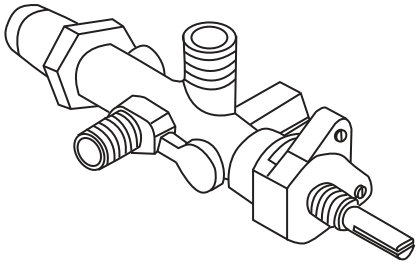

- Pilot safety and gas control in one.
- Also known as "flame failure device".
- Used together with oven thermostat on the Master Series and ST280 Series.
- Also available on some Garland counter top models.
- Uses a magnetic coil energized by a thermocouple to hold gas valve open.
- Cuts off gas supply when not sensing a pilot flame.

Flame Failure Devices And How They Work

There are three principles at work in a flame failure valve. One is the thermocouple, which generates in millivoltage, the other is the electric magnetic coil within the valve, which holds the valve open or allows it to shut if there is no millivoltage and the third is the valve itself.

The thermocouple is two dissimilar metals, which form a junction, and when they are heated, they create a millivoltage. This millivoltage, is used to power the magnetic coil.

The thermocouple is connected to a coil, which is at most times at the back of the valve. The coil operates on very low millivoltage to create a magnetic field that holds a plunger open inside the valve. If there is no millivoltage, the plunger is released and shuts down the valve shutting off gas flow to the pilot and burner.

The valve itself allows you to bypass the plunger by pushing it in. This allows gas flow to the pilot, which then must be ignited. The valve must be held depressed for approximately 30 seconds in order to sufficiently heat the thermocouple and generate millivoltage. If the valve is not depressed for 30 seconds it shuts down the gas flow.

Once the pilot is lit and the millivolts have been generated, the magnetic coil takes over and holds the valve open. If there is no heat at the thermocouple, the valve will not stay open. The same coil controls the burner flow, therefore, if you have ignited the thermocouple and you've got the valve to stay open, you can then go ahead and turn the burner on and the pilot will light the burner.

The particular pilot used on most of our burners is a fishtail design, which throws flames in two directions (one to ignite the burner and the other to keep the thermocouple junction hot). In between the pilot and the thermocouple is an electrode, which can be used to spark ignite the pilot. This can either be from a piezo igniter or from an electric spark.

All enclosed burners ignite in the high position and then they have to be pushed into go to the low position. The reason for this is to ensure no delay in ignition.

Burner Gas/Air Adjustments

Variations in field conditions, rough handling of the equipment in transit may indicate the need for adjustment of the primary air to the burners. Check the operation and adjust as below to provide a sharp blue flame at the full rate (open valve fully so that the thermostat is calling for maximum gas flow).

1. On the burner (star, "H" griddle, broiler, oven burners) locate the air shutter.
2. Loosen the lock nut so that the air shutter turns freely.
3. Reinstall the burner.
4. Turn on the gas flow and ignite the burner.
5. Rotate the air shutter to obtain the following:

Open (Star) burner

1/2" stable, sharp inner blue cones.

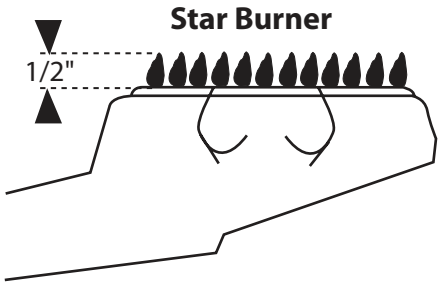

Hot tops, griddles

5/16" stable sharp inner blue cones.

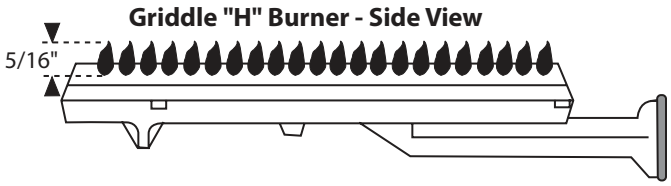

Oven burners,

If the burner flames are soft and unstable or show yellow tipping increase the amount of air by opening the air shutter.

Oven H Burner - Side View

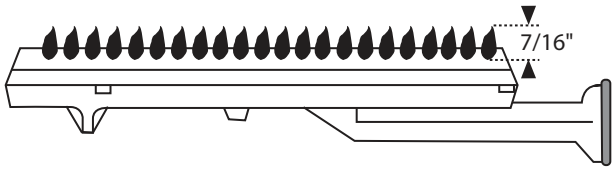

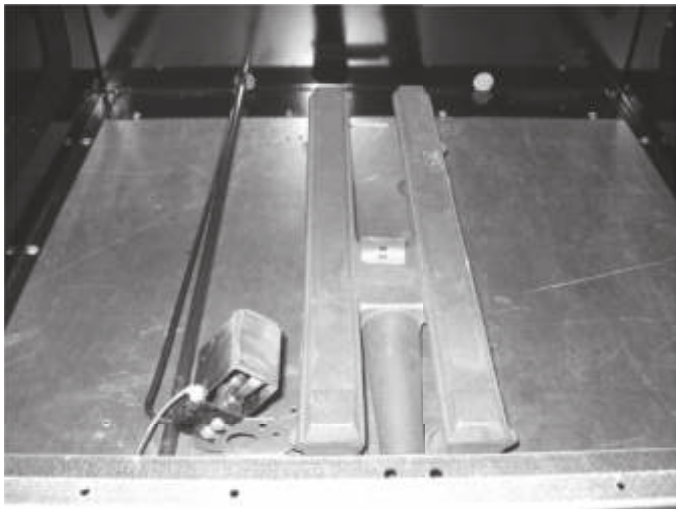

Knuckle burners

4" to 6" stable, blue flame, with slight yellow tips.

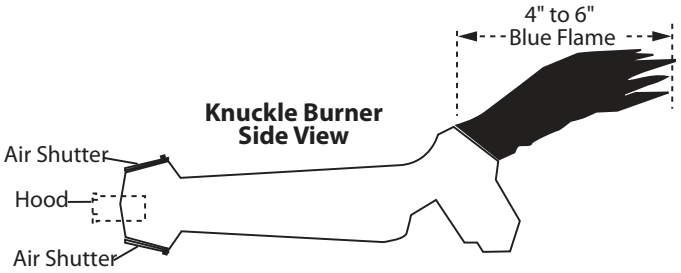

Note: If the burner flames are sharp, but lift off the burner ports, reduce the amount of primary air by closing the air shutter.

Garland U.S. Range

Section 7

Adjustments, Removal, Replacement, And Calibration Of Controls

630 Euro Sit Control

The 630 EUROSIT is a multifunction single knob valve with combined modulating/snap thermostat control.

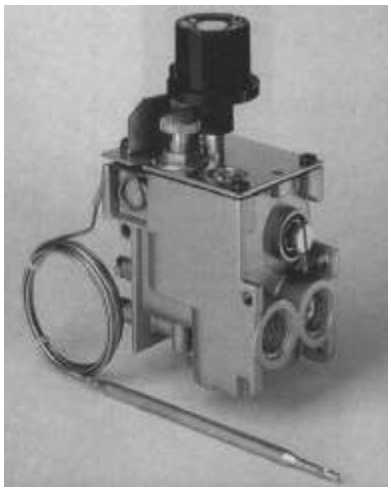

SIT Control

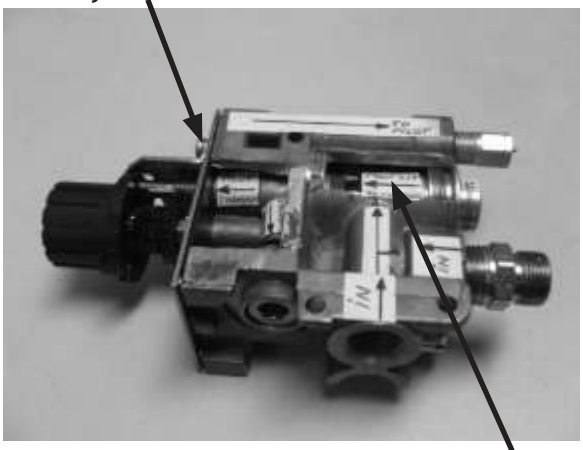

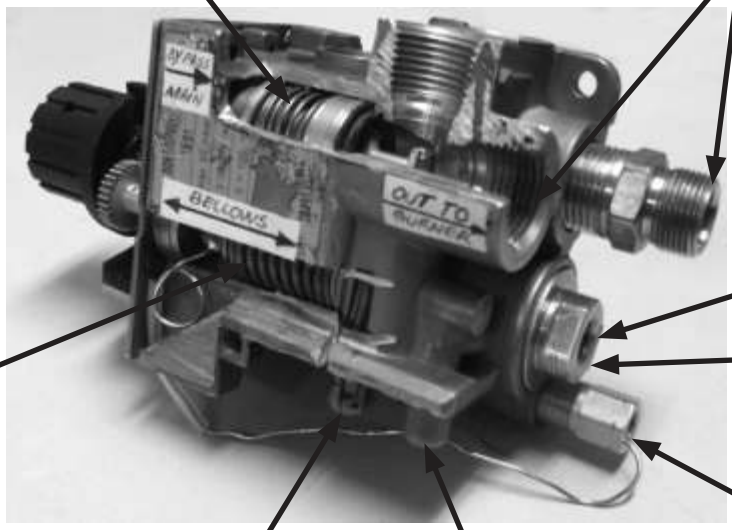

The gas inlet and outlet test points should not be used. A simple manifold test of incoming pressure will be sufficient. If the pilot flame is present and stable, but the burner does not come on, the SIT Control should be considered inoperative.

Sit Control

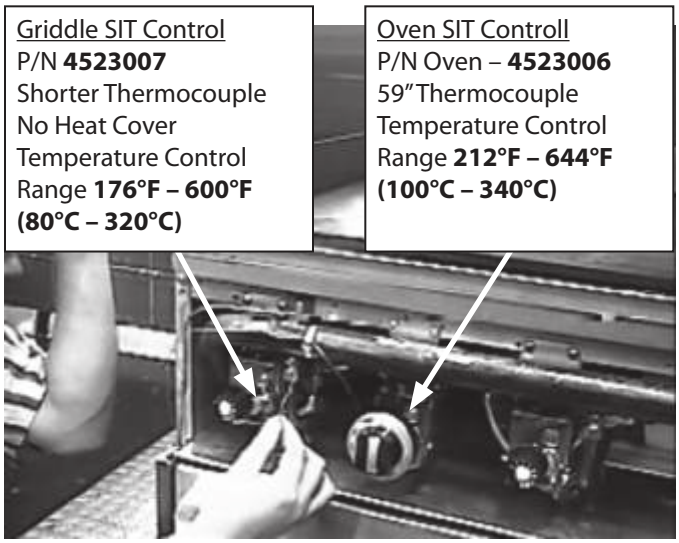

This control, although very similar to the mechanical controls found on Garland's current range and griddle models, has several major economical efficiencies that offer reliability advantages to the customer.

It is a safety valve, and thermostat in one assembly, and the safety valve is away from traditional high heat environment of the oven burner.

1. The safety valve (should not be removed from the body of the control for any reason.
2. Familiar Open circuit, closed circuit, and drop out checks should be made if the internal safety valve is suspected to be at fault.
3. This control does not require any initial flame setting (currently known as "bypass"). The control has an internal fixed bypass orifice.
4. This control does not require internal calibration. (Some minor knob adjustments could be appropriate, but it would be rare.
5. If a Sit control component is suspected to be internally at fault, replace the control.
6. Initial gas pressure checks are required to validate that the control cannot control knob set temperature.

Removal And Replacement

Thermostat Replacement

1. Remove left and middle grates.
2. Remove grate support gas line cover
3. Remove gas line shield
4. Remove Grease crumb tray
5. Remove left column trim piece (3 screws), then push down and pull off.
6. Remove left combustion chamber plate - 2 screws, tilt and remove.
7. Remove the two screws holding the pilot assembly and shield.

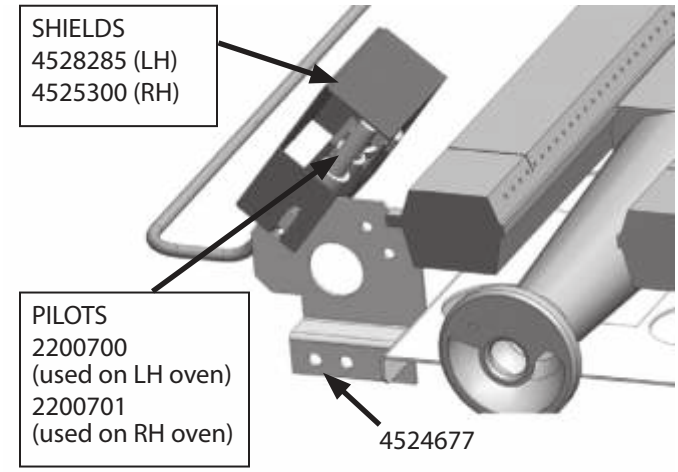

8. Push, unlock, and free the thermocouple from the pilot thermocouple tip holder.

Note: you can remove the oven bottoms for ease of access.

9. #10 metric wrench should be used on thermocouple fittings at the control; be careful not to lose the thermocouple adapter.
10. "Fish" the thermocouple down and out. BE CAREFUL NOT TO DAMAGE THE THERMOSTATS' CAPILLARY

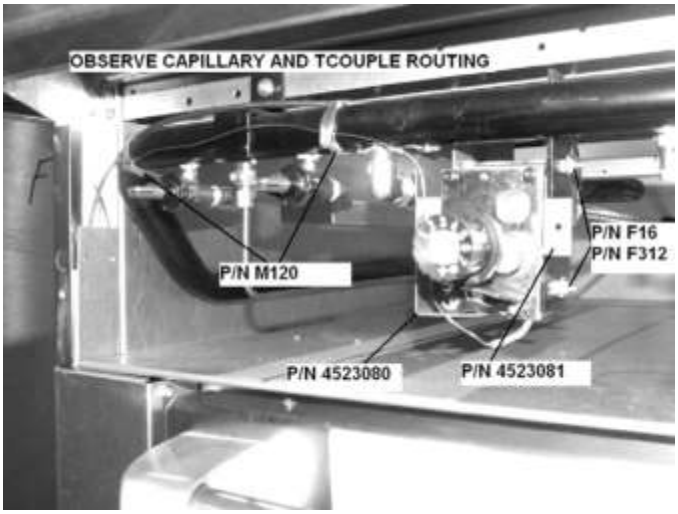

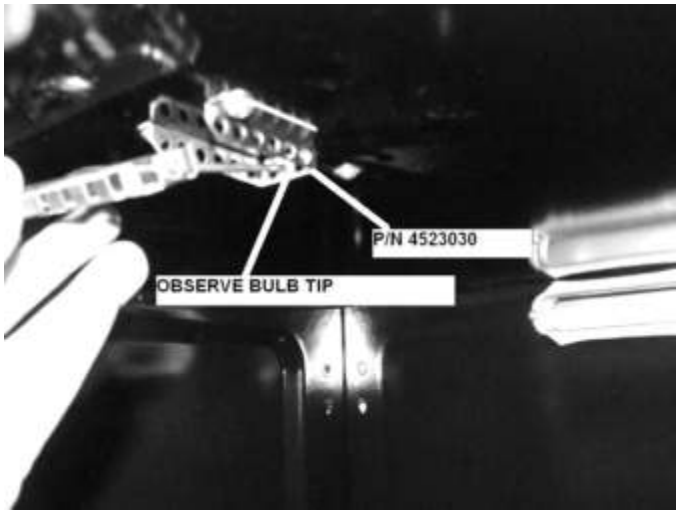

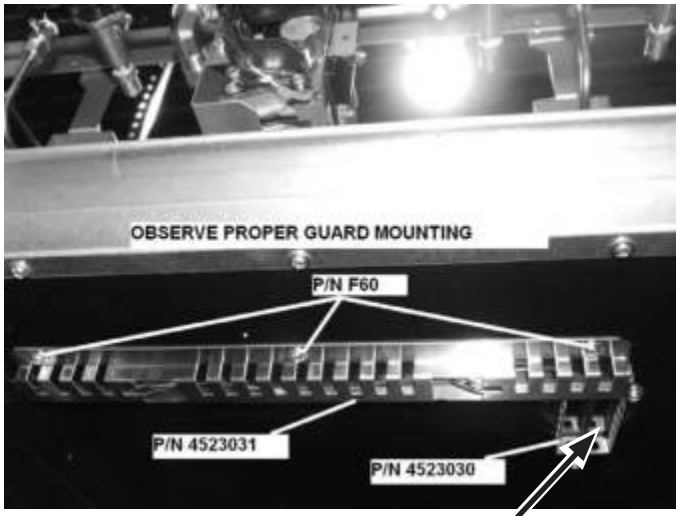

Bulb Tip Holder

11 Install the new thermocouple using the above procedure, but in reverse.

Thermostat Replacement:

1. Unmount the oven thermostat capillary from its holder.
2. Carefully snake the capillary through the guide holes and out of the guard holder.

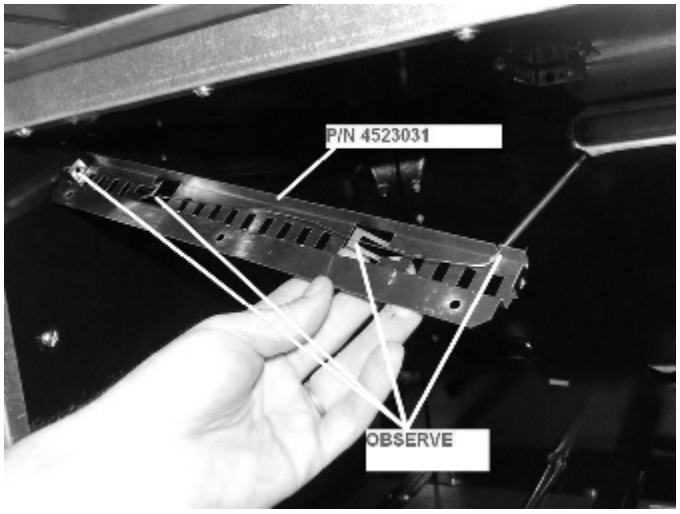

Control capillary guard mounting

3. Remove the gas lines from the valve. You will also need to remove the fittings from the valve.

4. Remove the two nuts and bolts that hold the thermostat in place. (Do not lose)

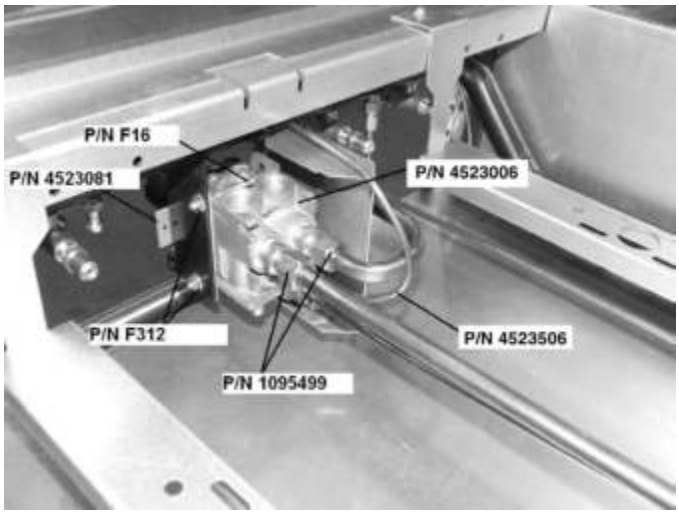

5. Remove the thermostat

To install a new thermostat:

1. Ensure that the fittings removed from the housing are installed in the same location where they were found on the control that is being replaced

2. Reverse the process listed above, ensuring that the proper sequence of installation is followed:
   A. Install left side first before the gas inlet tubing.

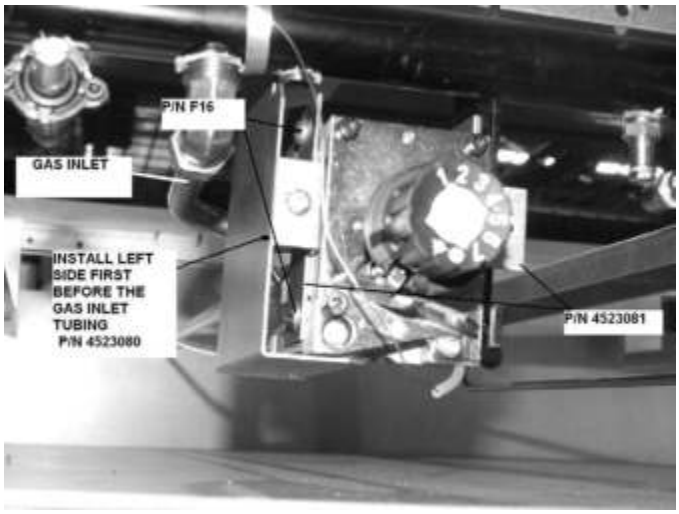

   B. Observe overlap.

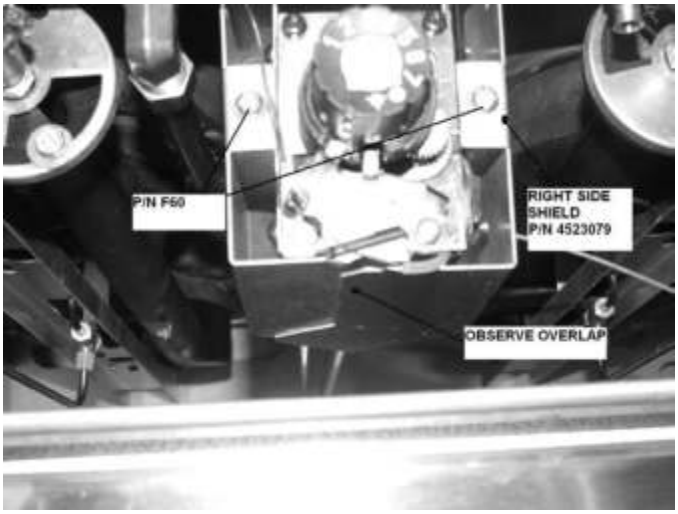

   C. Observe capillary and T couple routing

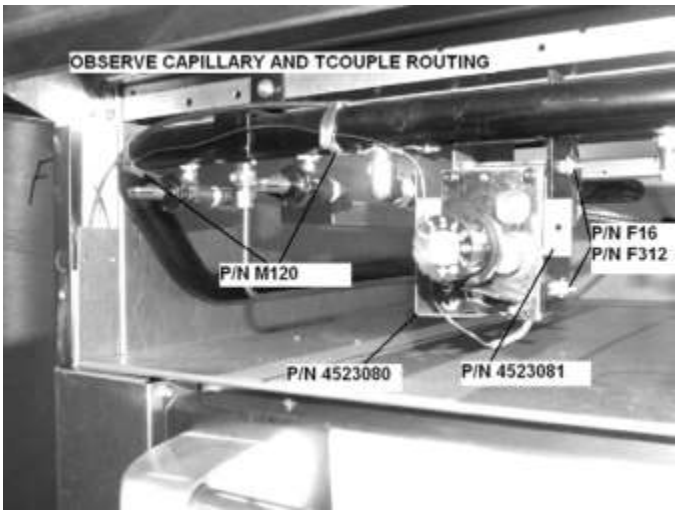

D. Insure that the temperature bulb is secured in the capillary guard holder as shown:

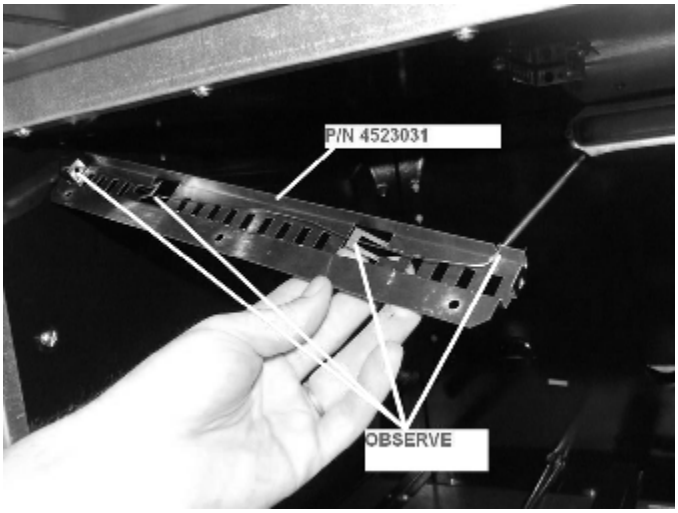

3. Check for leaks

4. Perform an operational check of the new control using your pyrometer as a crosscheck. Temperature recovery should be most responsive when initial temperature setting is set to 400 ° F. Temperature swings of ± 30 ° F at this temperature should be no longer than thirty minutes when heating a cool unit.

NOTE: For complete Sit Control installation instructions refer to Garland Service for an installation DVD.

BJWA Gas Thermostat

The BJWA control is a combination of gas cock and by-pass type thermostat. It is available with both by-pass and pilot adjustments. With the BJWA, the gas is turned on, and the temperature setting is made, with a single turn of the dial.

The BJWA can be adapted to have a multiple orientation and number of outlets. It can be mounted above or below the manifold via a flanged nipple.

Adjustments are on the front for by-pass and temperature calibration.

The BJWA is typically used on US Range Ovens and griddle and on Garland griddles.

- Ambient temperature 32°F (0°C) to 350°F (177°C)
- Maximum inlet pressure 0.5 PSI
- Capacity (Natural Gas): To 70,000 BTU/Hr

By-Pass Feature

The BJW has a by-pass feature which when the appliance reaches the temperature at which the dial is set, the control cuts down the flow of gas to the amount required to keep the appliance at that temperature. However, the control must by pass enough gas to keep the entire burner lighted. To maintain this minimum flame, the by-pass must be set carefully and accurately. Instructions on setting the by-pass feature on the BJWA are as follows:

1. Light the burner, then turn the dial to "FULL ON".

2. After 5 minutes, turn the dial clockwise to a point slightly beyond the first mark on the dial.

3. Remove the dial and bezel.

4. With a screwdriver, turn the by-pass adjuster – counter-clockwise to increase the flame, clockwise to decrease it, until there is a minimum blue stable blue flame over the entire ported area of the burner.

5. Replace the bezel and dial, turning the dial clockwise, until it locks in the "OFF" position.

NOTE: A replacement thermostat will come with the by-pass in the closed position.

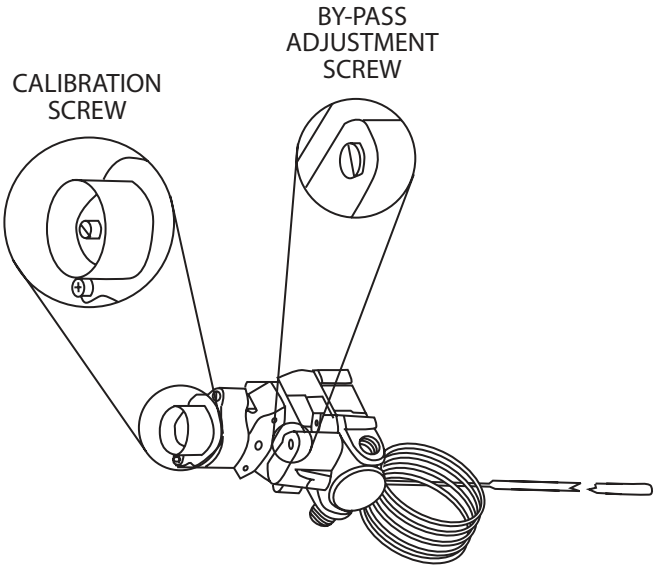

Calibrating The BJWA Thermostat

This control is a precision component, it is carefully calibrated at the factory. Re-calibration should not be undertaken until the by-pass flame has been adjusted and the operating gas pressure has been confirmed.

To check the temperature when re-calibrating, use an appropriate temperature reading meter. Position of the instrument/thermocouple should be in the geometric center of the oven. For a griddle, use a disc type thermocouple placed in the center of each zone. **There should be no products in the oven or on the griddle**

If the dial has a removable metal insert, proceed as follows:

1. Remove the dial and push out the insert.
2. Replace the dial and turn to the 350° mark.
3. After the burner has been on about 15 minutes, check the temperature.
4. Continue to check the temperature at 5 minute intervals until 2 successive reading are with in 5° of each other.

The control should be re-calibrated if your reading is not within ± 20° F of the dial setting (350°F). If re-calibration is required, the additional steps that need to be taken are as follows:

5. Hold the dial firmly, insert a screwdriver through the center of the dial and push the calibration stem. Do Not turn this stem.
6. While holding the calibration stem firmly with the screwdriver, turn the dial until it is set at the actual temperature as shown on your meter. Release the pressure on the calibration stem. Replace the dial inset.
7. Set the dial at 400°F mark. Check the temperature again as indicated in step 3 and 4 above. If the temperature is not with in ±20° of the dial setting (400°F), the control should be replaced.

If the dial does not have a removable insert or the dial has a "D" type stem, use the following procedure to re-calibrate.

1. Set the dial to the 350°F mark.
2. After the burner has been on about 15 minutes, check the temperature.
3. Continue to check the temperature at 5 minute intervals until 2 successive readings are within 5°F of each other.

The control should re-calibrated if your reading is not within ±20° of the dial setting (350°F). If re-calibration is required, the additional steps that are need to be taken are as follows:

4. Remove the dial assembly or the complete "D" type stem.
5. Push the calibration stem inward with a screw driver, while holding the calibration stem firmly in, turn the stem clockwise to obtain a lower temperature or counter-clockwise for a higher temperature. Each mark on the retainer represents 25°F. Replace the dial assembly or "D" type stem with dial.
6. Set the dial at 400°F mark. Check the temperature again as indicated in step 3 and 4 above. If the temperature is not with in ±20° of the dial setting (400°F), the control should be replaced.

Heavy Duty FDO Control Thermostat

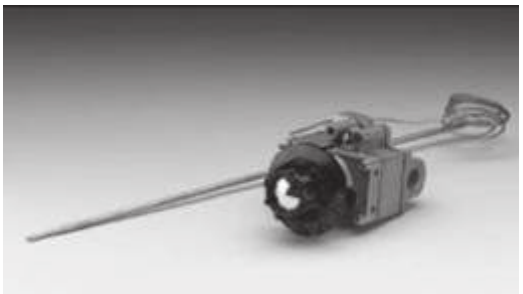

The FD Control is a heavy duty, high capacity gas thermostat. It is a modulating snap by-pass.

Garland uses the FD Control for range ovens and Pizza decks.

Adjustments are at the front for by-pass and temperature calibration.

Instructions for Model FDO Heavy Duty Control

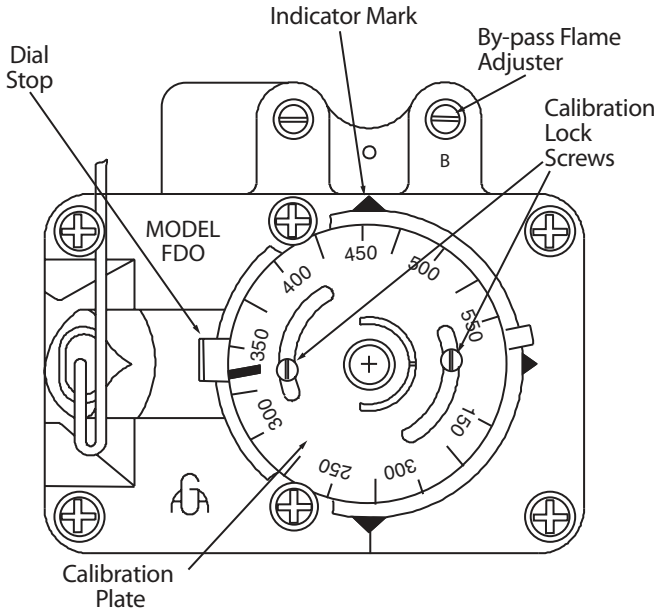

The model FDO is a precision made instrument, carefully set at the factory to accurately control oven temperatures, from 150° F (66°C) to 500°F (260°C). All adjustments are accessible from the front of the appliance after removing the dial. To remove the dial, grasp the knob portion and pull straight out.

1. With the oven cold, turn the dial counter-clockwise slowly from "Low Stop", until the bypass seat just snaps on.
2. Remove the dial.
3. With a screw driver, turn the bypass flame adjuster screw counter-clockwise to increase the bypass flame or clockwise to decrease the entire flame to a minimum stable flame.
4. Replace the dial. CAUTION: While making this adjustment, if the oven should become heated while the dial is set at a low range below 350°F (177°C), the bypass flame will shut off completely. If this occurs, turn the dial counter-clockwise slowly until the bypass gas snaps on. Then check the bypass adjustment as stated.

Below is the dial insert used by Garland on FD Control thermostats. Note the space between 300°F and the 350°F mark.

Re-calibration

Field re-calibration is seldom necessary, and should not be resorted to unless poor cooking results definitely prove that the control is not maintaining the temperature to which the dial is set. To check the oven temperature when re-calibrating use an indicating potentiometer or reliable mercury oven thermometer.

1. Place the thermocouple of the test instrument or thermometer in the geometric center of the oven.
2. Light the main burner. Observe which indicator mark aligns with the low stop position of the dial. Use this indicator mark for all settings.
3. Turn the dial so 400°F (240°C) lines up with the "low setting" indicator mark.

4. Allow the oven, or appliance, to heat and the thermostat to cycle three times. After sufficient time, check the temperature, if the temperature does not read with in ±20° of the dial setting,
re-calibrate as follows:

5. Pull the dial straight off without turning the thermostat shaft.

6. Hold the calibration plate and loosen the two calibration screws until the plate can be moved independently of the control.

7. Turn the calibration plate so that the instrument of the thermometer reading is in line with the indicator mark. Hold the plate and tighten the screws firmly.

8. Replace the dial.

9. Note: If the above adjustment is prevented by the two loosened calibration lock screws being in contact with the ends of the screw clearance plate to the proper location, reassemble the screws in the other tapped holes designed for them.

If the thermostat is cycling beyond the 20° tolerance and the appliance is under warranty **re-calibrate the thermostat** or if not under warranty consult the owner for proper action. If the thermostat is out of calibration more than fifty (50) degrees, it will not like hold an attempt of re-calibration, we suggest that the thermostat be replaced.

UN Type Griddle Thermostat

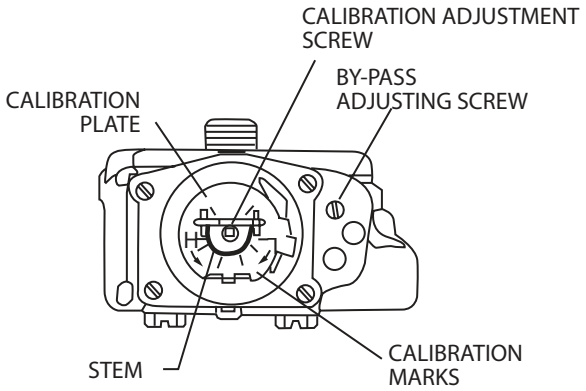

The Robertshaw UN throttle-type griddle control requires a by-pass adjustment. To adjust, proceed as follows:

1. Be sure that the pilot flames are lit and adjusted.

2. Turn the dial to 200°F (93°C) mark and allow the griddle to heat for approximately 5 minutes.

3. Turn the dial clockwise to "LOW" position. The control will cut down to the BY-PASS flame.

4. Carefully remove the dial, making sure the setting is not disturbed.

5. With a screwdriver, turn the by-pass adjustment screw and adjust to the "LOWEST POSSIBLE STABLE FLAME COVERING THE ENTIRE BURNER". Turn the screw clockwise to decrease or counter-clockwise to increase the size of the by-pass flame.

6. Replace the dial.

7. Turn the dial to the "OFF" position.

Re calibration

Do not re-calibrate until the following has been checked:

1. BY-PASS FLAME for proper adjustment (see above).

2 Check that the control bulb is fully inserted into the bulb tube.

To check calibration, proceed as follows:

Use a Robertshaw test instrument with a special disc type thermocouple or a reliable "SURFACE" TYPE thermometer. (Note: A drop of oil on the face of the disc will provide better contact.

1. Turn all griddle temperature control dials to 350°F (177°C). In order to allow the temperature to stabilize, the controls must be allowed to cycle three times before taking a test reading.

2. Check the temperature reading when the control cuts down to by-pass by placing the sensor firmly on the griddle surfaces directly above the sensing bulb of the control. Reading of the test instrument should be between 335°F (168°C) and 365°F (185°C).

3. If the dial setting does not agree with the test instrument reading within the above limits, re-calibrate as follows:

4. Remove the dial making sure the setting is not disturbed.

5. Each division mark on the calibration plate equals 15°F. With a screw driver, turn the calibration screw clock-wise (toward LOW) to reduce the temperature, or counter-clockwise (toward HIGH) to increase the temperature.

Example – The dial setting is at the 350°F mark. The test instrument is reading 380°F. Turn the calibration screw clockwise (toward LOW) two divisions.

6. Replace the dial, turning the dial to the "OFF" position.

7. Repeat steps 1 through 3 to make sure the correct adjustment has been made.

Electric Thermostat

Thermostat Operation

It is normal for a hydraulic thermostat to cycle with a temperature differential of 45° to 50°. If the thermostat is cycling beyond the 15° tolerances above or below the set point and the appliance is under warranty, re-calibrate the thermostat or if not under warranty, consult the owner for proper action. If the thermostat is out of calibration more than 50°, it will not likely hold an attempt of re-calibration. We suggest that the thermostat be replaced.

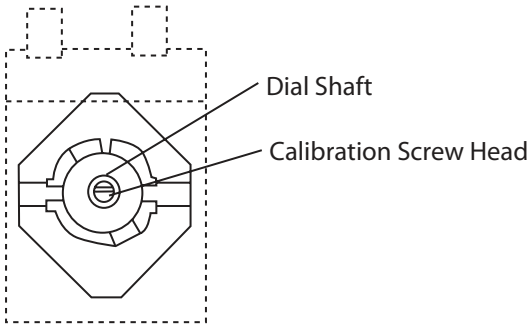

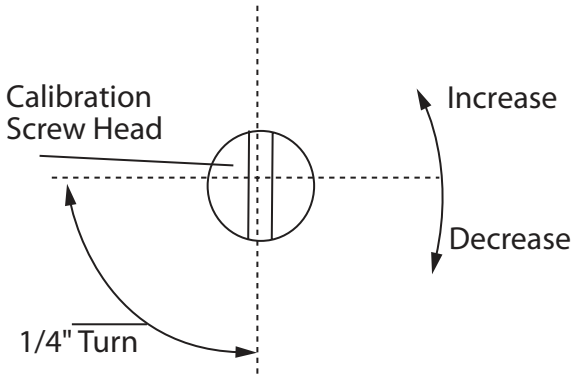

Thermostat calibration

Oven thermostat

1 Place the thermocouple of the test instrument in the center of the oven.

2. Turn the oven temperature control dial to 400°F. In order to allow the oven temperature to stabilize, the oven control must be allowed to cycle twice before taking a test reading.

3 Check the temperature reading just when the control cycles "OFF" as indicated by the cycling pilot lamp. If the temperature dose not read within 15° of the dial setting, re-calibrate as follows:

4. Carefully remove the thermostat dial, not disturbing the dial setting.

5. Hold the thermostat shaft steady and with a small flat blade screw driver, turn the calibration screw located inside the shaft clockwise to decrease the temperature or counter-clockwise to increase the temperature. Note each 1/4 turn of the screw will create a change of approximately 25°F.

6. Replace the thermostat dial and repeat steps 1 through 3 to verify that the correct adjustment has been made.

Griddle thermostat

1. Use a test instrument with a special type thermocouple or a reliable surface type pyrometer. Note: a drop of oil on the face of the disc will provide better contact with the plate.

2. Set all griddle thermostats to 300°F. In order to allow the griddle temperature to stabilize, the thermostats must be allowed to cycle twice before taking a test reading.

3. Check the griddle temperature when the thermostat just cycles "OFF" by placing the thermocouple firmly on the griddle surface directly above the sensing bulb of the thermostat. The reading should be between 285°F and 315°F. If the reading is outside of these limits, calibrate as follows:

4. Carefully remove the thermostat dial, not disturbing the dial setting.

5. Hold the thermostat shaft steady and with a small flat blade screw driver, turn the calibration screw, located inside the shaft, clockwise to decrease the temperature and counter-clockwise to increase the temperature. Note each 1/4 turn of the screw will create a change of approximately 25°F.

6. Replace the thermostat dial and repeat steps 1 though 3 to verify that the correct adjustment has been made.

Garland

U.S. Range

Section 8

Gas Pressure Regulators

Gas Pressure Regulators

Purpose Of A Gas Pressure Regulator

Gas pressure regulators have two main purposes, to reduce supply main pressure to safe operating pressures of connected appliances and to maintain constant downstream pressure, regardless of changes in the gas flow or upstream pressure variations.

Supply gas pressure is usually higher than the safe operating pressures of connected appliances.

If an appliance receives too much fuel, it will over fire. If it receives too little fuel, it will under fire. It will produce too much or too little heat. Combustion characteristics could change resulting in carbon monoxide generation. The appliance may not work properly or efficiently.

Main Categories Of Regulators

Service Regulator is used in natural gas systems to reduce service line pressure to building line pressure at the gas meter. In propane, they are used to reduce the service line pressure to building line pressure and placed between the storage container and the building.

System Regulator is used to reduce building line pressure when pressure required by a system of appliances or equipment is less than the pressure in the pipe where it enters the building.

Appliance Regulator is used to reduce building line pressure to the pressure required by the appliance. It is often built into a combination control.

Downstream refers to the flow of gas after it has passed the regulator. Upstream refers to the flow of gas before it passes through the regulator.

A manual shut-off valve must be installed upstream of the regulator so that the regulator may be isolated for servicing.

System regulators may require an internal relief device or a line relief device to allow excess gas to be vented outdoors. Some vents contain a leak-limiting device to restrict flow so that gas accumulation does not reach dangerous levels. These are not required to vent outdoors.

The pressure setting on a line relief device should not be higher than the lowest rated item downstream of the relief device. Most natural and all propane relief devices must be vented outdoors.

Hydrostatic Relief Device

A hydrostatic relief device is used in propane systems. They are to be installed between two valves in a propane system. If liquid propane is trapped between two closed valves in piping or hose, it will begin to expand as its temperature increases. The hydrostatic relief device relieves this pressure and prevents the pipe from bursting.

Venting Of Regulators

Vent lines must be protected from damage including water entry and inset damage. Vent line size must be at least the nominal pipe size of the vent outlet of the pressure regulator but not less than 0.25".

Individual vent lines may be connected to a single vent line provided this single vent line is twice the area of the total area of the connected bleed vent lines. Vent lines must be increased by one pipe size diameter for every 50 ft. The increase must be made at the regulator vent outlet.

In natural gas, when using a diaphragm or combination control valve, relieved gas may be vented to the low-inlet pressure appliance combustion chamber. It must have a continuous pilot.

Terminology

Set Point is the desired outlet pressure of the regulator. As flow rate increases, the downstream pressure decreases.

Lock up is the pressure above the set point that is used to shut the regulator off tight. To make a tight seal, the regulator must increase the downstream pressure to force the disk into the knife-edge. This is called lock up pressure.

Droop and offset describe the downstream pressure drop set point. At this point, the valve is opened and there is an increase flow of gas. Droop is a percentage of the set point pressure. The accuracy of a regulator is determined by the amount of flow it can pass for a given amount of droop. The closer a regulator is to the set point, the more accurate it is.

The Loading Element is used to counterbalance the downstream pressure. It is usually a spring.

The Measuring Element is usually a diaphragm. It is used to measure the changes in the downstream pressure. It is attached by a stem to the restricting element so that they both move together.

The Restricting Element moves in response to the measuring element when the downstream pressure changes. Usually, it is a disk or plug that controls the amount of flow by varying the orifice opening.

The Atmospheric Vent allows the air above the diaphragm to escape or enter as the diaphragm moves up or down.

Vent Limiting Orifice is used in appliance regulators. It allows equal limits of inhalations and escape of air from the upper diaphragm chamber. If the diaphragm ruptures, the leakage is limited to less than 1 cubic foot per inch at 7" W.C. gas pressure. The size of the orifice is 38.

Low Capacity Appliance Regulators carry both main burner and pilot gas loads. They are usually marked with the symbol "P". This means they are suitable for pilot load capability. These are designed to produce a fine pressure control. They work with small pilot flame flows that are mandatory operating requirements for some appliances.

High Capacity Appliance Regulators are only used to regulate the gas pressure to the main burner. The pilot flame receives the 7" W.C. gas pressure delivered by the gas meter or system regulator. The gas to the pilot flame is controlled by a throttling valve (needle valve) sometimes called the B-cock.

Basics Of A Gas Pressure Regulator

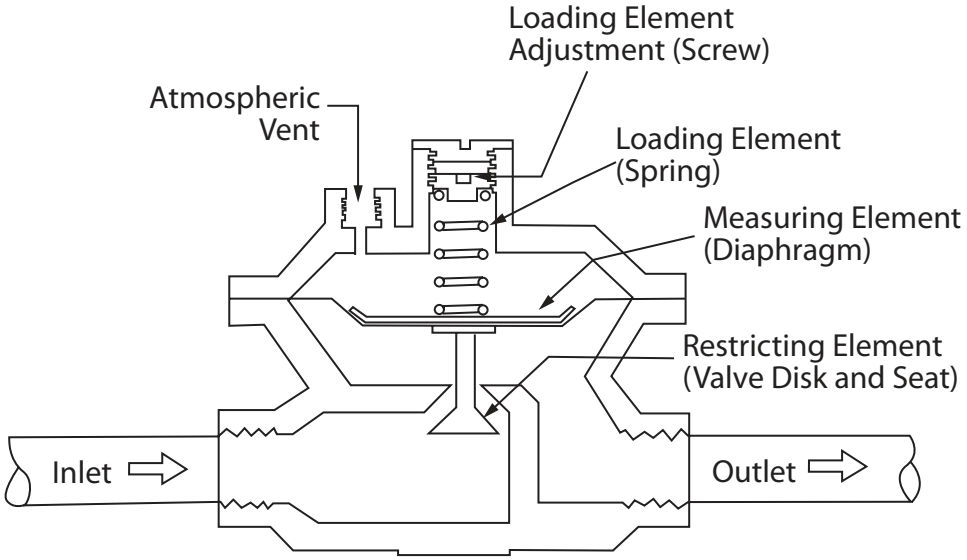

Garland

U.S. Range

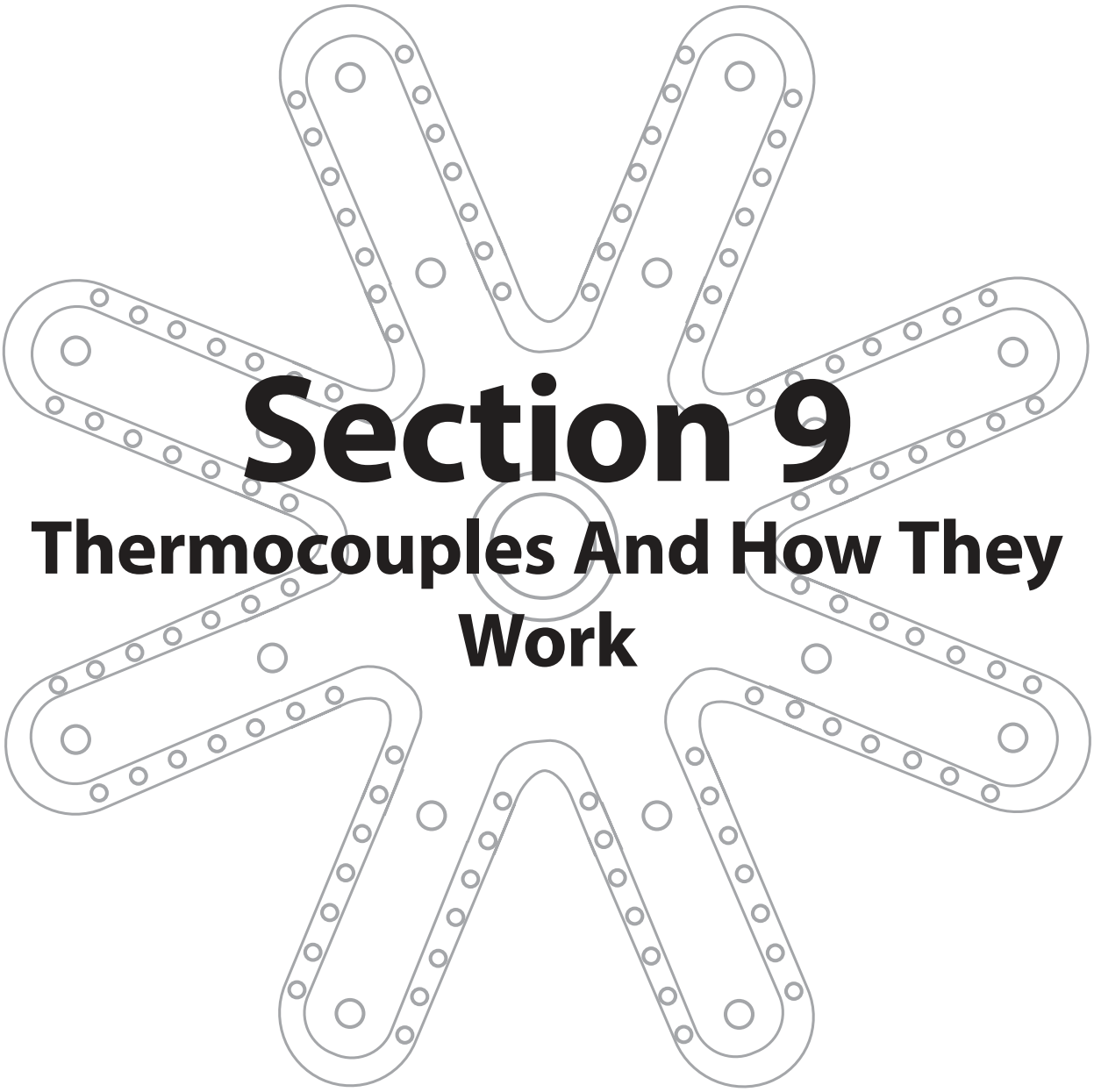

Section 9

Thermocouples And How They Work

Thermocouples And How They Work

Thermocouples are used to generate voltage to hold a magnet on a pilot safety valve. It plays an important part of the flame safety system in a gas oven.

The thermocouple uses the combined effects of temperature change and electricity. It consists of a bimetallic strip joined at one end (called the hot junction). When the hot junction is heated, a DC voltage is generated across the two other ends of the strips (the cold junction).

The thermocouple is used to prove the pilot flame. If the pilot flame goes out, the thermocouple prevents the main gas from opening.

The magnitude of the voltage across the cold junction depends on the:

- Two materials of the bimetallic strip
- Temperature difference between the hot and cold junctions

The small amount of electricity produced is 20 to 30 millivolts. This millivoltage is used to hold open an electromagnet assembly in the gas control. If the pilot goes out, the thermocouple will cool down and no longer generate electricity and in turn, de-energize the magnet, closing the valve.

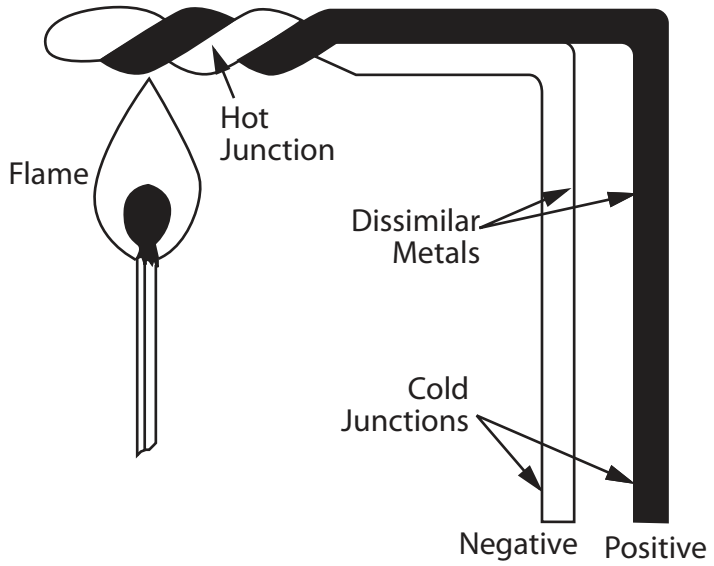

Garland

U.S. Range

Section 10

Trouble Shooting
The Oven Pilot Safety System

Automatic Pilot Valve

The automatic pilot valve is a protective device that allows gas to flow to the oven burner only when the pilot burner is burning. (This is used on GARLAND ovens and ranges to have safe lighting provisions provided by the flow interrupter that will not allow gas to flow to the oven burner while the red button is depressed.)

GARLAND has used two different types of pilot safety valves. On the 280 Series the valve used up to July 1988 was the Robertshaw TS-11J. From July 1988 to September 2000, the Johnson BASO H15HQ-6 valve was being used. The Heavy Duty Series used the Robertshaw TS-11J up to October 1990; from then on the Johnson BASO H15HQ-6 valve was being used. Figure 1 showing the TS-11J and Figure 2 showing the Johnson BASO H15HQ-6. Garland has since started using the Robert Shaw TS-11J valve on all Garland and US Range using this system.

Figure 1

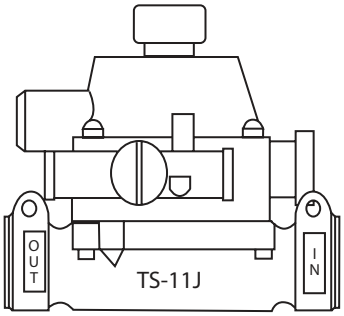

Figure 2

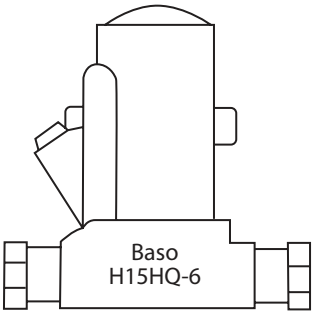

2007 (Sit Control) X, U, & G Series Safety Systems

Garland's new Restaurant ranges contain a gas control system enclosed in one component; the Sit Control. The oven/griddle pilot safety system is an internal subcomponent of the control. If, during a normal safety valve system check, the safety valve/coil is found to be weak or inoperative, **the complete control must be replaced.**

Thermoelectric
Flame Failure Device

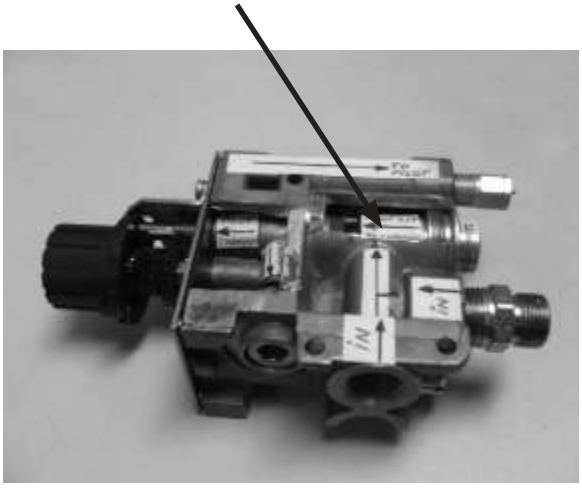

Note: This control uses a different adapter, than the one described below to complete a Closed circuit test.

Thermocouple replacement.

A thermocouple nut should be started and turned all they way in by hand. An additional quarter turn with a small wrench will then be sufficient to seat the lock washer and maintain adequate contact. A too loose or too tight connection of the thermocouple nut to the automatic pilot valve can prevent the thermocouple from activating the valve. A visual examination of the thermocouple lead should be made to make sure that there are no cracks or ruptures. Every effort has been made to insure trouble-free performance of this system with a minimum of service.

To Test Magnet Assembly And Thermocouple Operation

Heating the thermocouple tip by the pilot flame produces an electric potential that is used to energize the magnet that, in turn holds open the main and pilot valves. When the pilot is "OUT" or improperly adjusted, insufficient heat is applied to the thermocouple tip to produce adequate electrical generation that results in the control shutting itself off.

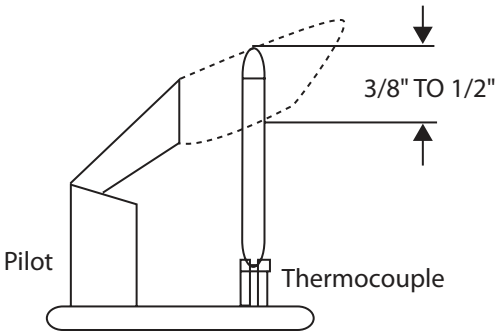

If, while following the proper lighting procedures, the magnet cannot be made to "HOLD", inspect the pilot flame for proper size and adjustment (see pilot burner adjustment). If the magnet will still not hold, make the following checks.

Closed Circuit Test

(To test magnet & thermocouple as a complete unit)

To make the closed circuit test, remove the thermocouple lead from the magnet contact. Place an adapter (Robertshaw Part #75036) in the magnet contact and turn the thermocouple into the adapter finger tight. Connect millivolt leads to the adapter and thermocouple lead as shown in figure "A".

Figure A

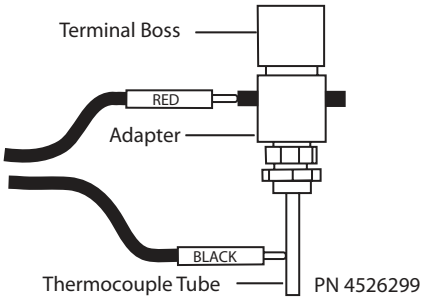

In the Sit Control, insert a metric M9 adapter in the magnet contact to complete the safety valve check as shown in Figure B.

Figure B

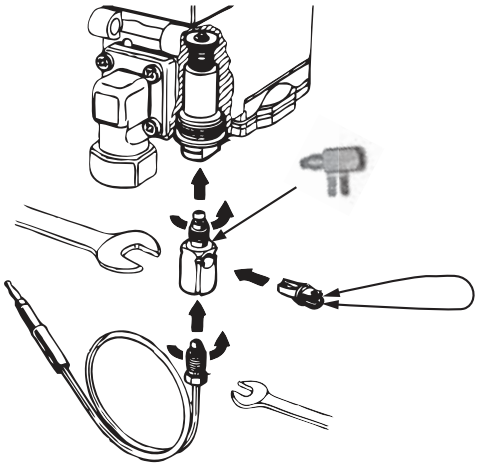

1. Make sure the thermocouple is properly inserted into the pilot housing, and has no play. Also check gas tubing connection at the pilot and tighten if loose.

2. Re-light the pilot, and read the meter after the pilot has been burning for three minutes. If the pilot will not continue burning, depress and hold the temperature knob to manually open the SIT safety valve to check the thermocouple output for this closed circuit check. If insufficient (normal output for closed circuit is 8-14 millivolts), and under 7 millivolts, replace the thermocouple. If the millivolt reading is above 7 mV, and the safety magnet does not hold, replace the valve.

3. If the closed circuit mV reading is the same as the open circuit reading, the coil is electrically open, and the valve must be replaced.

4. Check for drop out time which should occur within 60 seconds and at approximately 2 mV since the pilot was out.

5. Relight the pilot and turn the main burner On. As the oven heats up, it is normal to see a slight decrease of millivolts.

		Thermocouples		
		SIT	**Robertshaw**	**Orkli**
mV	Closed Circuit	8-14	10-15	8-14
	Open Circuit	18-28	20-30	24-30
	Drop out	2	5	2

Open Circuit Test

1. Disconnect the thermocouple from the safety valve.
2. Attach the thermocouple to the millivolt test instrument.
3. Heat the sensor end of the thermocouple at the pilot flame or similar flame characteristics, monitoring the millivolt meter.
4 If the millivolt reading is below 14 millivolts, replace the thermocouple.

NOTE: The Sit thermocouple open circuit voltage will be approximately 18-28 millivolts.

5. If the closed circuit mV reading is the same as the open circuit reading, the coil is electrically open, and the valve must be replaced.

Garland

U.S. Range

Section 11

Gas Equipment Field Service Trouble Shooting Guide

Gas Equipment Field Service Troubleshooting Guide

A professional as listed in your maintenance and repair center guide should perform service.

PROBLEM	POSSIBLE CAUSE	SOLUTION
Burner flame soft-lazy tip yellow.	Not enough air mixing with gas.	Open air shutter.
Flame lifts off burner ports. Flashes back in Burner. Pops excessively when turned off.	To much air mixing with gas.	Close air shutter.
Delayed ignition.	Unit over gassed or orificed incorrectly	Check gas pressure and orifice size.
Pilot burner will not ignite.	Burner adjusted improperly. Burner	Adjust gas and air mixture.
	Burner ports plugged.	Clean burner ports.
	Pilot flame too small.	Adjust pilot valve.
	Draft in kitchen	Determine cause.
Flame lifts off pilot orifice.	Pilot over gassed.	Adjust pilot valve.
Oven pilot keeps going out.	Faulty thermocouple or safety valve.	Check safety system.
	Pilot flame too small.	Adjust pilot valve.
	Loose connection on safety valve	Tighten connection.
	Main burner blowing pilot out	Adjust gas and air mixture.
Millivolt output low on open circuit test.	Pilot flame too small.	Adjust pilot flame.
	Flame yellow-pilot dirty.	Clean and adjust pilot.
	Thermocouple faulty.	Replace.
Millivolt output high on open circuit test but low on closed circuit test.	Short in magnet.	Replace safety valve.
Millivolt output high on open closed circuit test but safety valve will not open.	High millivolt reading on drop out test.	Replace safety valve.
SIT Control Oven too hot or not hot enough	Control out of calibration	Compensate with a small adjustment on knob. If not helpful, replace the control.
Oven too hot or not hot enough	Control out of calibration or bypass improperly set.	Check calibration and set bypass.
SIT Control Burner flame shuts off when oven gets up to temperature.	Non adjustable bypass feature inoperable	Replace control
Burner flame shuts off when oven gets up to temperature.	By-pass set too low.	Adjust by-pass.
	By-pass set to high causing control to go into snap action.	Adjust by-pass.
Door will not stay closed.	Not enough tension on springs.	Adjust tension nut clockwise.
	Springs broken, hinge link broken	Replace faulty parts.
Door will not stay open.	Too much tension on springs.	Adjust tension nut counter-clockwise.
Door not closing on one side.	Door warped.	Re-stress door.
Doors not level or low in center of unit.	Trunion support loose.	Level and tighten support.
	Trunion support worn.	Replace.

Garland

U.S. Range

Section 12

Maintenance & Care Instructions For Ranges And Oven Surfaces

Exterior

Black Baked Enamel

Allow equipment to cool after use and wash all grease deposits from exterior with a hot mild detergent or soap solution. Dry thoroughly. Do not use abrasives.

Brushed Chrome or Brushed Nickel

Wash when cool with hot mild detergent or soap solution. Do not use abrasives.

Stainless Steel

Normal soil may be removed with a detergent or soap solution applied with a cloth. To remove grease that has baked on, apply cleanser to a damp cloth or sponge. Rub cleanser on the metal in the direction of the polishing lines of the metal. Never rub in a circular motion. Soil and burnt deposits, which do not respond, can usually be removed by rubbing the surface with Scotch-Brite scouring pads or stainless scouring pads. Do not use ordinary steel wool.

Heat tint can be removed by a vigorous scouring in the direction of the polish lines using Scotch-Brite scouring pads or a stainless scouring pad in combination with a powdered cleanser.

Top Sections

Griddle Top

Seasoning

Before being used for the first time, all griddle surfaces must be seasoned. Wash griddle with a hot detergent or soap solution, rinse and dry thoroughly. Set griddle heat to lowest possible temperature for 30 minutes. Apply a thin film of cooking oil. Allow oil to remain on griddle 5 minutes then wipe off. Reset heat to medium temperature and apply a second film of oil. Wipe off excess after 5 minutes. Reset heat to cooking temperature and apply a final film of oil wiping off surplus after 3 minutes. The griddle is now seasoned and ready for use. The griddle may be re-seasoned at any time by cleaning thoroughly and following the seasoning procedure.

Cleaning

Griddle plates should be wiped daily while still warm. Remove carbonized grease or food with a spatula. When necessary, clean the griddle's surface thoroughly using a fine griddle brick or a liquid griddle cleaner (available from your kitchen equipment dealer). Polish the griddle surface to a bright finish. Wash the griddles surface, rinse and dry thoroughly. Re-season the griddle.

Operating Suggestions

- Avoid overheating the griddle as this causes sticking and grease carbonizing resulting in a hard to clean surface.
- Do not hit the spatula on the griddle plate, as this will nick the surface.
- Clean the grease tray often to eliminate spillovers

Hot Top or Boil Plate

Cleaning

Hot tops should be wiped while still warm. Remove burnt materials with a spatula. When top is cool, wash the surface with a mild detergent or soap. Dry thoroughly. Wipe with a slightly oiled cloth.

Operating Suggestions

- Do not leave the top "full on" when not in use as this abuses the unit, causes heat tint, wastes fuel and heats up the kitchen unnecessarily.
- Use cooking utensils with flat bottoms for maximum efficiency.

Open Top

Cast Iron Tops & Grates

When cast iron ring grates (which are covered in grease) arrive at the end users, the following seasoning and care is recommended.

- Wash top grates with hot mild detergent or soap solution. Dry thoroughly. Rub with vegetable oil on all exposed surfaces in the direction of the grain.

- Soiled and burnt deposits can be removed with a wire brush. Difficult to remove burnt on deposits can usually be removed using an oven cleaner. Wash, dry thoroughly, and then rub with vegetable oil.
- Continuing this procedure will prohibit the development of rust and will eventually form a non-stick surface with the carmelization of oil on the cast iron top grates and rings.

Porcelain Tops & Grates

Top grates should be washed daily with a hot detergent or soap solution and dried thoroughly.

Drip Pans

Should be emptied and washed daily.

Operating Suggestions

- Avoid the use of oversized pots.
- Avoid spillovers.
- Covered pots will boil faster.

Oven

Cleaning

The interior of oven is porcelain enamel and should be wiped clean daily. Clean with a soap solution. At least once a week, the oven should be thoroughly cleaned with a detergent or any commercial oven cleaner recommended or use with porcelain enamel. Clean oven bottom daily to remove spillovers.

Continuous Clean Ovens

The continuous clean enamel is a porous type coating and, while some soils will start to burn off at baking temperature, some will be absorbed into the coating out of sight. It is recommended and necessary to heat the oven to 500°F, from time to time, and "burn-off" at this temperature for a couple of hours to help clear the porous coating.

Some soils such as cherry pie filling, barbecue sauce, ketchup, sugar, etc., have a tendency to carbonize and take on a puffed up appearance during normal cooking cycles. These lumps of hardened soil should be brushed out of the oven before the burn-off cycle is started.

Care should be taken to avoid excessive soil drippings. If soils are deposited on the coating at a rate faster than the coating can tolerate, a puddle will form and eventually glaze over. This glaze will have to be removed. This may involve scraping the glaze surface with a knife, but normally a wet SOS or Jet pad will be adequate. The continuous clean coating has abrasion resistance so that the steel wool type pads will not harm nor scratch the surface.

Do not use abrasive powder type cleaners. These powder type cleaners will tend to fill porous coating and reduce activity of the coating during future use.

Do not use sodium hydroxide content type cleaners such as Easy Off, Jifoam, etc. The continuous clean has been subjected to tests with these cleaners and, while there has been no visible attack until after at least 3 applications, staining does occur at this point and is very pronounced.

Slight discoloration after a sever spill-over and cleaning may develop. This will in no way affect future clean off ability.

Operating Suggestions

- Low temperature roasting is recommended for minimum meat shrinkage and best retention of juices.
- Lining ovens with aluminum foil may upset the heat balance
- Warped pans or pie tins result in poor bakes.
- Highly polished pans usually cause light bottoms.
- Burned goods and cracked cakes are generally the result of temperature being too high.
- Dried out baked products means temperature was too low.
- Load pans evenly, spacing away from each other and sides of oven.

Broilers

Cleaning

Remove and clean grid racks and shields daily. While rack is removed, clean the interior. Carriage mechanisms should be kept clean particularly around the roller bearings.

Operating Suggestions

- Rack roller bearings must be lubricated once a month with high temperature grease.

- To brand meat, place it on an unused heated area of the rack.
- Delicate fish is best broiled in a pan or on a metal platter.

Stock Pot Ranges

Cast Iron Tops

When cast iron tops (which are covered in grease) arrive at the end users, the following seasoning and care is recommended.

- Wash top grates with hot mild detergent or soap solution. Dry thoroughly. Rub with vegetable oil on all exposed surfaces in the direction of the grain.
- Soiled and burnt deposits can be removed with a wire brush. Difficult to remove burnt on deposits can usually be removed using an oven cleaner. Wash, dry thoroughly, then rub with vegetable oil.
- Continuing this procedure will prohibit the development of rust and will eventually form a non-stick surface, with the caramelization of oil on the cast iron grates.

Cleaning

Use a hot mild detergent or soap solution to clean exterior daily. Dry thoroughly.

Garland

U.S. Range

Section 13

Gas Technician's Glossary

Gas Technician's Glossary

Air-Gas Ratio: The ratio of combustion air supply flow rate to the fuel gas supply flow rate.

Air Shutter: An Adjustable shutter on the primary air opening of a burner, which is used to control the amount of combustion air introduced into the burner body.

Atmospheric Pressure: The pressure exerted upon the earth's surface by the weight of atmosphere above it.

Automatic Gas Pilot Device: A gas pilot incorporating a device, which acts to automatically shut off the gas supply to the appliance burner if the pilot flame is extinguished.

British Thermal Unit (BTU): Is the heat energy produced when burning a fuel gas. It is defined as the quantity of heat required to raise the temperature of one pound of fresh water one degree F. An ordinary wooden match produces approximately 1 BTU of heat.

Butane: A hydrocarbon fuel gas heavier than methane and propane and a major constituent of liquefied petroleum gases.

Combustion: The rapid oxidation of fuel gases accompanied by the production of heat or heat and light.

Combustion Air: Air supplied in an appliance specifically for the combustion of a fuel gas.

Combustion Chamber: The portion of an appliance within which combustion normally occurs.

Combustion Products: Constituents resulting from the combustion of a fuel gas with the oxygen in air, including the inert, but excluding excess air.

Cubic Foot of Gas (Standard Conditions): The amount of gas that will occupy 1 cubic foot when at a temperature of 60°F, and under a pressure equivalent to that of 30 inches of mercury.

Density: The weight of a substance per unit volume. As applied to gas, the weight in pounds of a cubic foot of gas at standard pressure and temperature.

Dewpoint: The temperature at which a vapor will start to condense into its liquid form.

D.M.S.: Drill Manufacturer's Standard equivalent to Standard Twist Drill or Steel Wire Gage numbers.

Draft Hood (draft diverter): A device built into an appliance, or made part of a vent connector from an appliance. It is designed to: 1) assure the ready escape of the products of combustion in the event of no draft, backdraft, or stoppage beyond the draft hood; 2) prevent a backdraft from entering the appliance; 3) neutralize the effect of stack action of a chimney or gas vent upon the operation of the appliance.

Downdraft: Excessive high air pressure existing at the outlet of chimney or stack, which tends to make gases flow downward in the stack.

Excess Air: Air that passes through an appliance and the appliance flues in excess of that which is required for complete combustion of the gas. Usually expressed as a percentage of the air required for complete combustion of the gas.

Extinction Pop: This is merely flashback occurring when a burner is turned off. It is usually instantaneous although it can occur several seconds after the burner has been turned off. What happens is that primary air continues to flow into the burner even though the gas jet has been cut off and does not inject air. The mixture in the burner changes from the normal operating mixture to all air and flow rate through the ports falls towards zero. Under these conditions, it is possible for the flame speed to exceed flow velocity at some instant and flashback may occur. The result is a tiny explosion or pop. Increasing primary air input will reduce the flashback tendency.

Fahrenheit: The common scale of temperature measurement in the English system of units. It is based on the freezing point of water being 32ºF and the boiling point of water being 212ºF at standard pressure conditions.

Flame Speed: Speed at which the flame front moves toward the air-gas mixture issuing from the burner port. It depends on the quantity of air-gas mixture and type of gas.

Flame Stability: Primary air, Flame speed, port size and port depth are several factors affecting flame stability. Flames on a burner tend to stabilize at a point where flow velocity out and burning speed back are equal. This balance of flow velocities and burning speed explain why flames change when primary air or gas rate is adjusted.

Flame Temperature: Maximum is reached when perfect combustion is achieved.

Flame Velocity: The speed at which a flame travels through a fuel-air-mixture. Burning speeds vary with types of gases, and the amount of air mixed with the gas. This air to gas ratio is very important in that it is directly related to flame stability

Flashback: An undesirable flame characteristic in which burner flames strike back into a burner to burn there or to create a pop after the gas supply has been turned off. Flashback occurs when gas-air flow velocity is less than burning speed at some point near a burner port. Flashback is a condition where gas ignites within the burner. Any factor, which increases burning speed, tends to promote flashback, and any factor decreasing flow velocity from the ports will contribute to flashback. Flashback is more prevalent with faster burning gases. Natural gas is a relatively slow burning gas hence flashback is less likely. Reducing primary air is the usual cure for flashback.

Flashback Arrestor: A gauze, grid or any other portion of a burner assembly used to avert flashback.

Flashtube: An ignition device, commonly used for igniting gas on range top burners. An air-gas mixture from the burner body is injected into the end of a short tube. The mixture moves along the tube, is ignited by a standing pilot flame at the other open end of the tube and the flame travels back through the mixture in the flashtube to ignite the gas at the burner ports.

Floating Flames: An undesirable burner operating condition, usually indicating incomplete combustion in which flames leave the burner ports to "reach" for combustion air.

Flue Gases, Flue Products: The combination of combustion products and excess air leaving the combustion area. Since water is produced as a vapor in the burning of the gas, it is also present in the flue products. If the flue products and vent system remain hot enough, this vapor is harmlessly discharged. If not, the vapor can reach the dew point and condense into water, which can accumulate in the system.

Flue Loss: The heat lost in flue products exiting from the flue outlet of an appliance.

Flue Outlet: The opening provided in am appliance for the escape of flue gases.

I**gnition Temperature:** Temperature at which an air-gas mixture will initiate and support combustion

Inches of Mercury Column: A unit used in measuring pressures. One inch of mercury column equals a pressure of 0.491 pounds per square inch.

Inches of Water Column: A unit used in measuring pressures. One inch of water column equals a pressure of 0.578 ounces per square inch. One inch mercury column equals about 13.6 inches water column.

Incomplete Combustion: Combustion in which the fuel is only partially burned. A poorly vented appliance restricts flow of air into an appliance. Lack of ventilation around an appliance may lower oxygen content in the surrounding air. This can be a result of spillage of combustion products into the room as well. These conditions can cause incomplete combustion and poor performance of an appliance. Adequate, but not excessive ventilation is a must and cannot be over emphasized.

Inerts: Non-combustible substances in a fuel, or in flue gasses, such as nitrogen or carbon dioxide.

Infrared Burner (Radiant Burner): A burner, which is designed to operate with a hot, glowing surface. A substantial amount of its energy output is in the form of infrared radiant energy.

Injection: Drawing primary air into a gas burner by means of a flow of fuel gas.

Input Rate: The quantity of heat or fuel supplied to an appliance, expressed in volume or heat units per unit time, such as cubic feet per hour or BTU per hour.

Input Rating: The gas burning capacity of an appliance in BTU per hour as specified by the manufacturer. Appliance input ratings are based on sea level operation and need not be changed for operation up to 2 000 feet elevation. For operation at elevations above 2 000 feet, input ratings should be reduced at the rate of 4 percent for each 1 000 feet above sea level.

Lean Mixture: An air-gas mixture, which contains more air that the amount needed for complete combustion of the gas.

Lifting Flames: An unstable burner flame condition in which flames lift or blow off the burner port(s). Excessive primary air can cause flames to lift and blow off the burner ports, which can be noisy as well as inefficient. More importantly, however, is the production of dangerous carbon monoxide under this condition. Any factor, which reduces burning speed, promotes lifting flames. Also, any factor, which increases flow velocity from ports, contributes to lifting flames. Over-firing of burners is also a cause. The normal cure for lifting flames is the reduction of primary air input to the burner.

Liquefied Petroleum Gases: The terms "Liquefied Petroleum Gases", "LPG" and "LP Gas" mean and include any fuel gas which is composed predominantly of any of the following hydrocarbons, or mixtures of them: propane, propylene, normal butane or isobutane and butylenes.

Limits of Flammability: Upper and lower ranges of gas in the air-gas mixture that will support combustion. Low amount of fuel makes mixture lean. High amount of fuel renders mixture rich.

Manifold: The conduit of an appliance, which supplies gas to the individual burners.

Manifold Pressure: The gas pressure in an appliance manifold, upstream of burner orifices.

Manufactured Gas: A fuel gas that is artificially produced by some process, as opposed to natural gas, which is found in the earth. Sometimes called "town gas".

Methane: A hydrocarbon gas with formula CH_4, one carbon atom linked to four hydrogen atoms. The principal component of natural gas.

Mixed Gas: A gas in which the heating value of manufactured gas is raised by co-mingling with natural or LPG (except where natural gas or LPG is used only for "enriching" or "reforming")

Mixer: That portion of a burner where air and gas are mixed before delivery to the burner ports.

1. Mixer Face: The air inlet end of the mixer head.
2. Mixer Head: That portion of an injection type burner, usually enlarged, into which primary air flows to mix with the gas stream
3. Mixer Throat: (Venturi) That portion of the mixer which has the smallest cross-sectional area, and which lies between the mixer head and the mixer tube.
4. Mixer Tube: That portion of the mixer, which lies between the throat and the burner head.

Natural Draft: The motion of flue products through an appliance generated by hot flue gases rising in a vent connected to the furnace outlet.

Natural Gas: A fuel which is derived from the earth consisting primarily of Methane (CH_4). Natural gas is considered non-toxic and non-poisonous. Natural gas has little or no odor in its refined state. Odorants are added, such as mercaptan and sulphur compounds, to aid in leak detection.

Orifice: An opening in an orifice cap (hood), orifice spud or other device through which gas is discharged, whereby the flow of gas is limited and/or controlled. (See also universal orifice)

Overrating: Overrating is the operation of a gas burner at a greater rate than it was designed for.

Port: Any opening in a burner head through which gas or an air-gas mixture is discharged for ignition.

Port Loading: The input rate of a gas burner per unit of port area, obtained by dividing input rate by total port area. Usually expressed in terms of BTU per hour per square in of port area.

Pressure Regulator: A device for controlling and maintaining a uniform outlet gas pressure.

Primary Air: The combustion air introduced into a burner, which mixes with the gas before it reaches the burner port. Usually expressed as a percentage of air required for complete combustion of the gas. Ideal burning conditions generally is 10 cubic feet of air per cubic foot of gas.

Primary Air Inlet: The opening or openings through which primary air is admitted into a burner. Products of Combustion: Carbon dioxide and water vapor formed in burning plus the nitrogen in the reactants that entered with the combustion air.

Propane: A hydrocarbon gas heavier than methane but lighter than butane. It is used as a fuel gas alone, mixed with air or as a major constituent of liquefied petroleum gases.

Rich Mixture: A mixture of gas and air containing too much fuel or too little air for complete combustion of the gas.

Secondary Air: Combustion air externally supplied to a burner flame at the point of combustion. It is the remaining air required for complete combustion besides primary air.

Soft Flame: A flame partially deprived of primary air such that the combustion zone is extended and inner cone is ill-defined.

Soot: A black substance, mostly consisting of small particles of carbon, which can result from incomplete combustion and appear as smoke.

Specific Gravity: The weight of one cubic foot of gas compared to one cubic foot of dry air, at a common pressure and temperature. The specific gravity of a gas determines whether it will rise or fall when released into air. Air is given a specific gravity rating of 1.0. Since natural gases have a specific gravity of 0.4 to 0.8, it will rise when released into the air. Propane gas, however, with a specific gravity rating of 1.5 and butane gas 2.0 both will fall when released into air.

Universal Orifice: A combination fixed and adjustable orifice designed for the use of two different gases, such as LPG and natural gas.

Updraft: Excessively low air pressure existing at the outlet of a chimney or stack which tends to increase the velocity and volume of gases passing up the stack.

Utility Gases: Natural gas, manufactured gas, liquefied petroleum gas-air mixtures or mixtures of any of these gases.

Vent: A device, such as a pipe, to transmit flue products from an appliance to the outdoors. This term also is used to designate a small hole or opening for the escape of a fluid (such as in a gas control or regulator)

Vent gases: Products of combustion from gas appliances plus excess air, plus dilution air in the venting system above a draft hood.

Venturi: A section in a pipe or a burner body that narrows down and then flares out again.

Viscosity: The property of a fluid to resist flow.

Yellow Tipping of Flames: Too severe a reduction in primary air also causes its problems. Yellow tipping is one of them. Flames will eventually become all yellow if no primary air is supplied. Glowing carbon particles in the flame cause these yellow tips. Soot will form if these yellow flames impinge on cooler surfaces. Here again, carbon monoxide can be produced. Yellow tipping is corrected by the injection of more primary air.

Water Column: Abbreviated as W.C. A unit used for expressing pressure.

Garland

U.S. Range

Section 14

Range Wiring Diagrams

Garland and US Range Gas Ranges Wiring Diagrams

Number	Description	Page
N/A	Garland Restaurant Duty left RC Oven	73
N/A	Garland Restaurant DUTY RC2 Oven	74
3056100	US Range C836C Cuisine Series	75
229064	US Range 836C Cuisine Series	76
2706601	US Range Px/S Series Left Single RC Oven	77
2706602	US Range Px/S Series Right Single RC Oven	78
2706603	US Range Px/S Series 2 RC Ovens	79
4514771	US Range Px/SX Series Left Single RC Oven	80
4514772	US Range Px/SX Series Right Single RC Oven	81
4514774	US Range Px/SX Series Two RC Ovens	82
2529700	ME/MSTE 40RC Electric Spark	83
2529701	M/MS 40RC	84
2529600	M/MS 40 Electric Spark	85
2444200	Sentry Electric Spark	86
2444300	STE286RC, STE284RC Left, ST283RCE	87
4524261	G/U Series Right (single) Convection Oven	88
4524262	G/U Series Left Convection Oven	89
4524263	G/U Series Two Convection Ovens	90
4524800	RGB G/U Series Right Convection Oven	91
4524801	RGB G/U Series Left Convection Oven	92
4524802	RGB G/U Series Two Convection Ovens	93

Instruction Drawings

30129	Sheet 2 of 3	Master Series Broiler/Range interconnection kit	94
30129	Sheet 3 of 3	Restaurant Series Broiler Range interconnection kit	95
45239		G, U, X, (Sit control) Interconnect kit	96

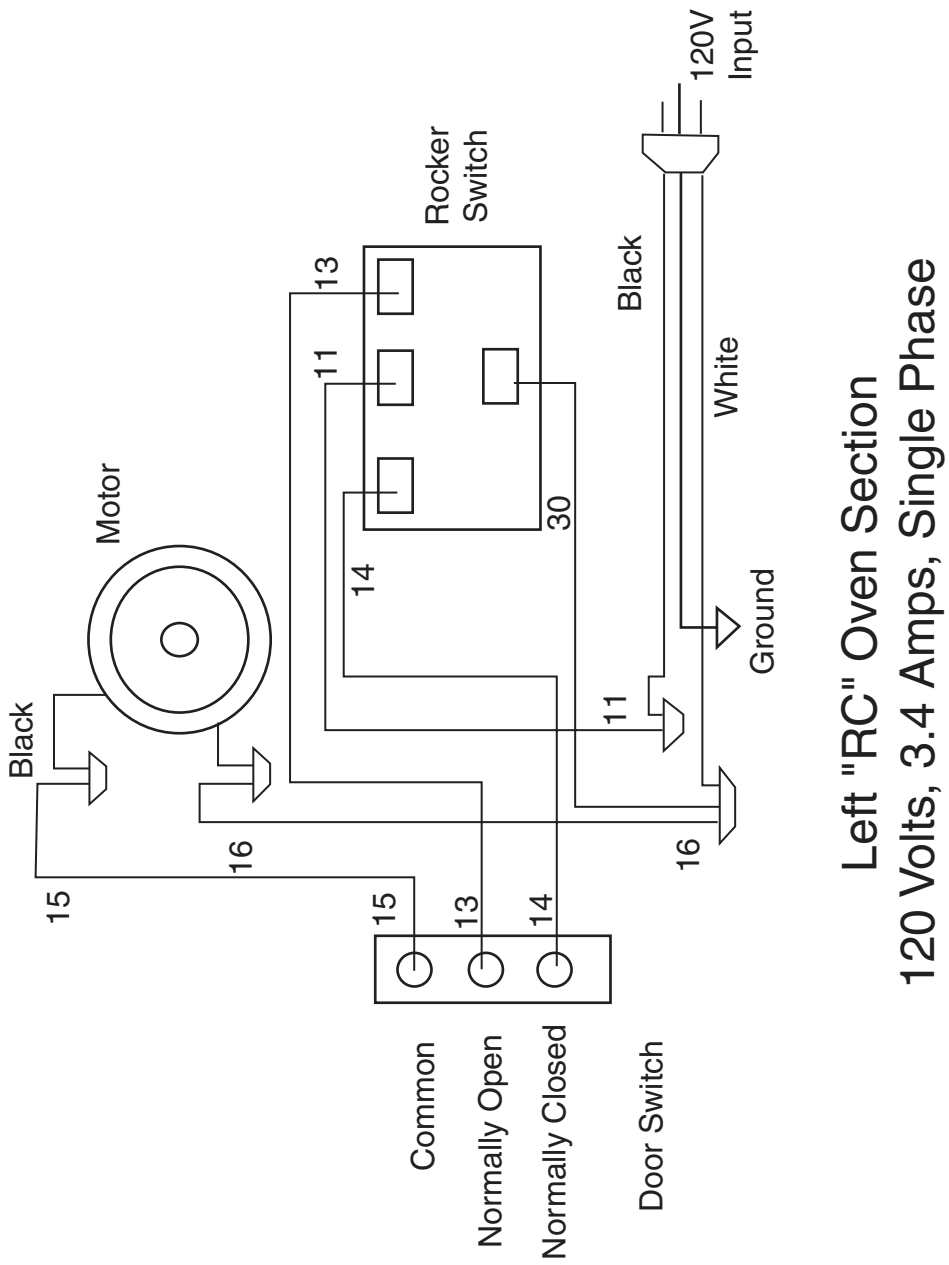
Left "RC" Oven Section
120 Volts, 3.4 Amps, Single Phase
Motor
Black
15
16
Rocker Switch
13
11
14
30
Black
White
Ground
120V Input
11
16
15
13
14
Common
Normally Open
Normally Closed
Door Switch

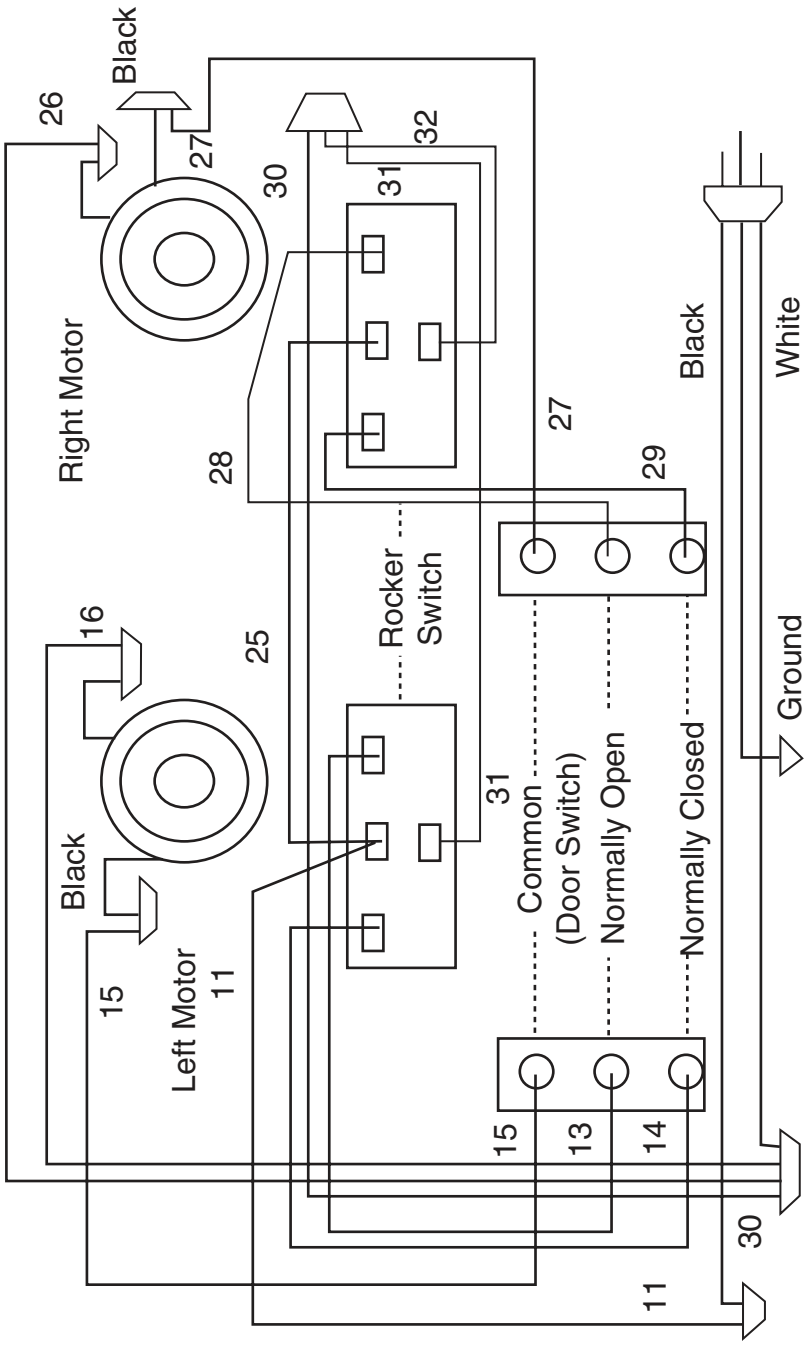

"RC2" Wire Diagram
120 Vol, 6.8 Amps, Single Phase

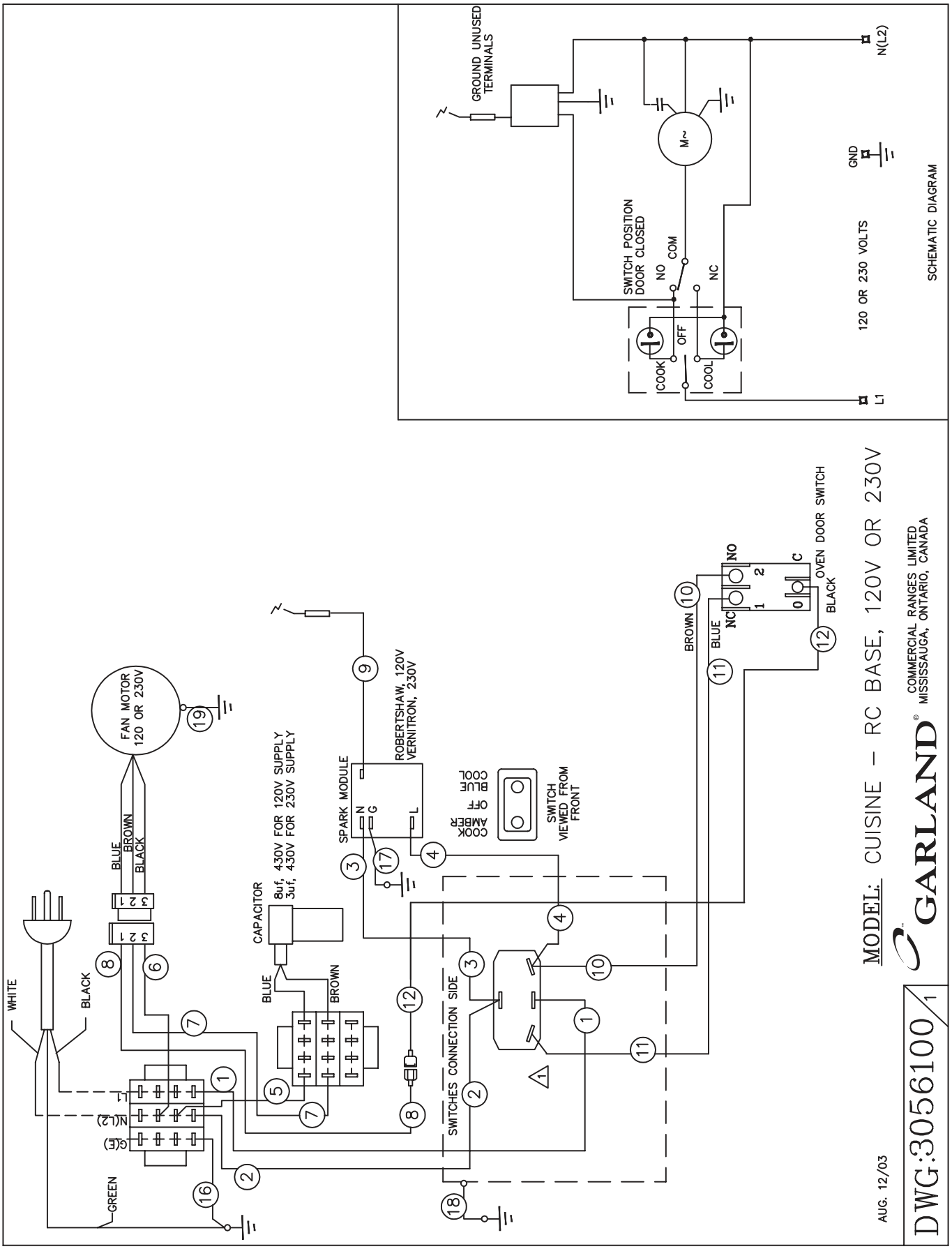
GROUND UNUSED TERMINALS
M~
N(L2)
GND
L1
SWITCH POSITION DOOR CLOSED
NO
COM
NC
COOK
OFF
COOL
120 OR 230 VOLTS
SCHEMATIC DIAGRAM
FAN MOTOR 120 OR 230V
BLUE
BROWN
BLACK
WHITE
BLACK
GREEN
L1
N(L2)
G(E)
CAPACITOR
8uf, 430V FOR 120V SUPPLY
3uf, 430V FOR 230V SUPPLY
BLUE
BROWN
SPARK MODULE
N
G
L
ROBERTSHAW, 120V VERNITRON, 230V
COOK AMBER
OFF
BLUE COOL
SWITCH VIEWED FROM FRONT
SWITCHES CONNECTION SIDE
BROWN
BLUE
NO
NC
C
OVEN DOOR SWITCH
BLACK
MODEL: CUISINE - RC BASE, 120V OR 230V
GARLAND
COMMERCIAL RANGES LIMITED
MISSISSAUGA, ONTARIO, CANADA
AUG. 12/03
DWG:3056100/1

U.S. Range	WIRE DIAGRAM 836-C/841-C *	229064-1 REV 2

MANUAL IGNITION

MODEL: 836-C/841-C

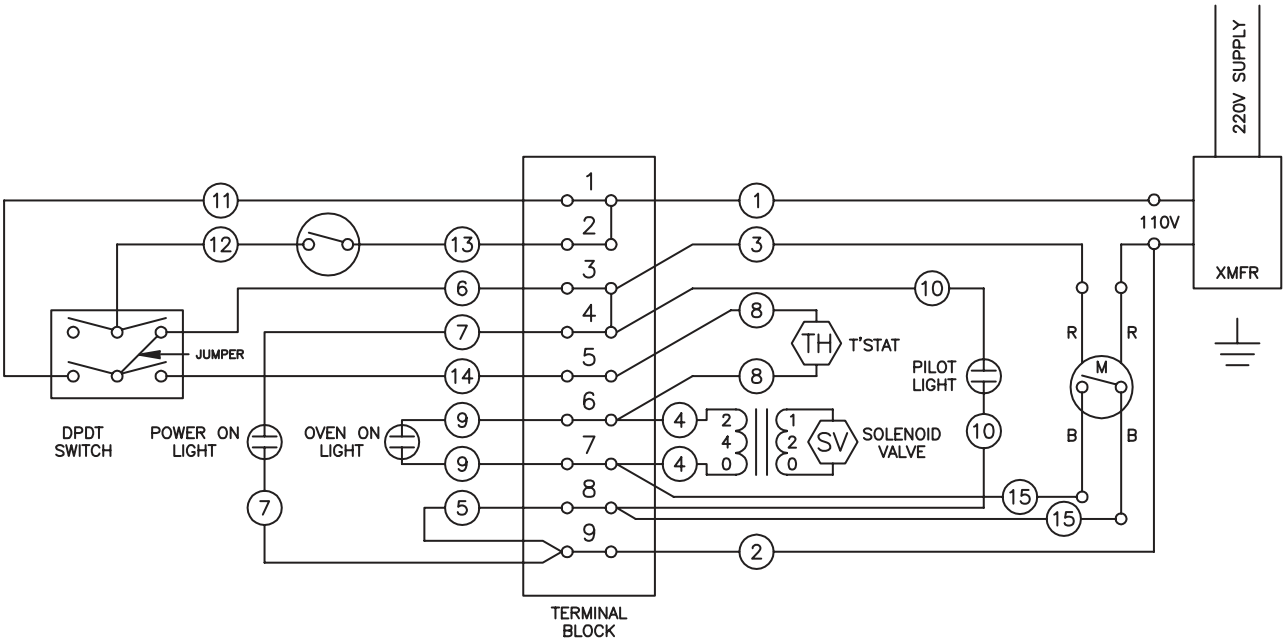

MOTOR:
1/4 HP
220 VOLTS
1 PH/50 HZ
1725 RPM

FOR SUPPLY CONNECTIONS, USE WIRES SUITABLE FOR AT LEAST 194°F (90°C)

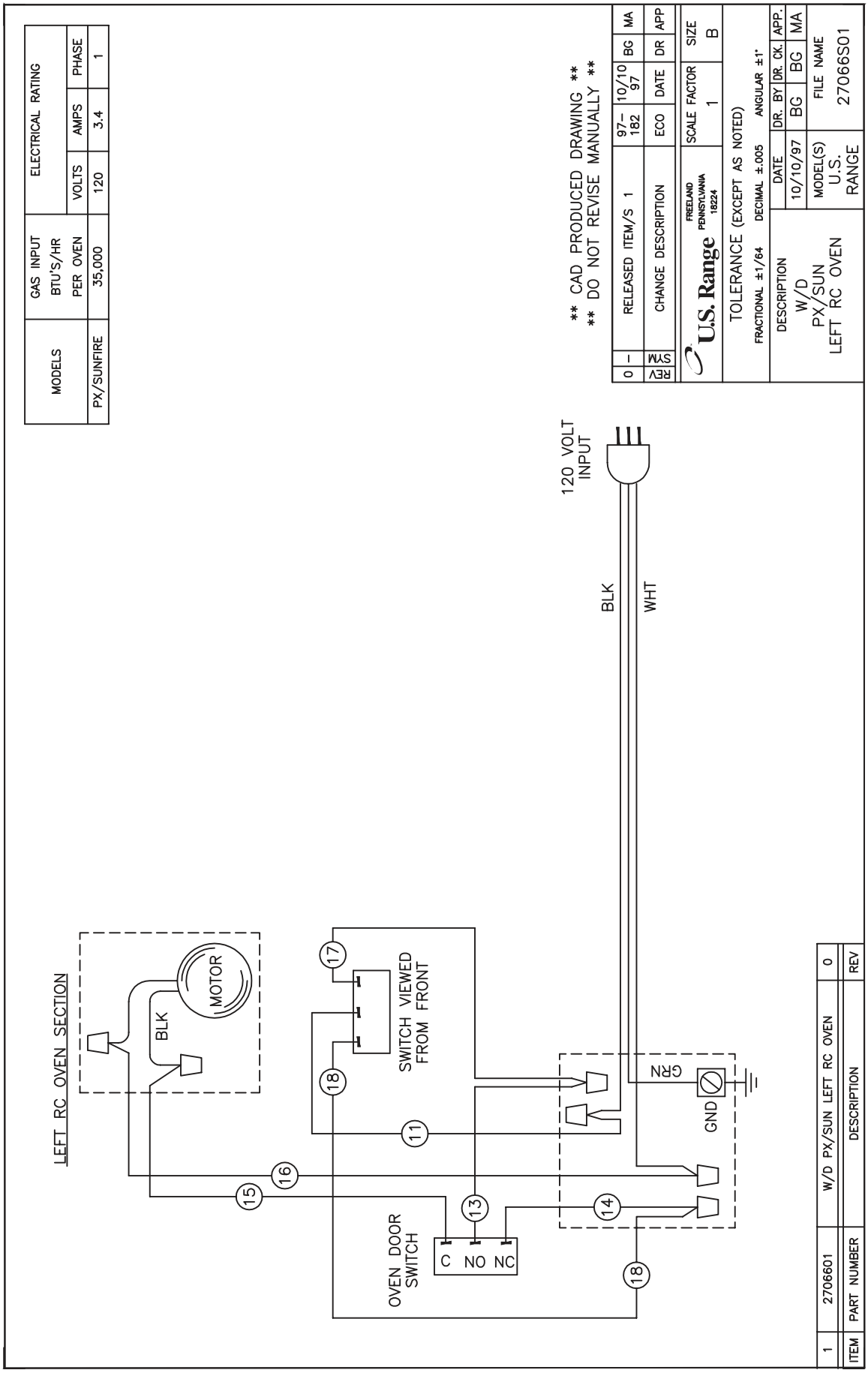
MODELS
GAS INPUT BTU'S/HR PER OVEN
ELECTRICAL RATING
VOLTS
AMPS
PHASE
PX/SUNFIRE
35,000
120
3.4
1
** CAD PRODUCED DRAWING **
** DO NOT REVISE MANUALLY **
REV
SYM
RELEASED ITEM/S 1
97-182
10/10 97
BG
MA
CHANGE DESCRIPTION
ECO
DATE
DR
APP
U.S. Range
FREELAND PENNSYLVANIA 18224
SCALE FACTOR 1
SIZE B
TOLERANCE (EXCEPT AS NOTED)
FRACTIONAL ±1/64
DECIMAL ±.005
ANGULAR ±1°
DESCRIPTION W/D PX/SUN LEFT RC OVEN
DATE 10/10/97
DR. BY BG
DR. CK. BG
APP. MA
MODEL(S) U.S. RANGE
FILE NAME 27066S01
120 VOLT INPUT
BLK
WHT
GRN
GND
LEFT RC OVEN SECTION
MOTOR
BLK
SWITCH VIEWED FROM FRONT
OVEN DOOR SWITCH
C NO NC
11
13
14
15
16
17
18
18
ITEM
PART NUMBER
DESCRIPTION
REV
1
2706601
W/D PX/SUN LEFT RC OVEN
0

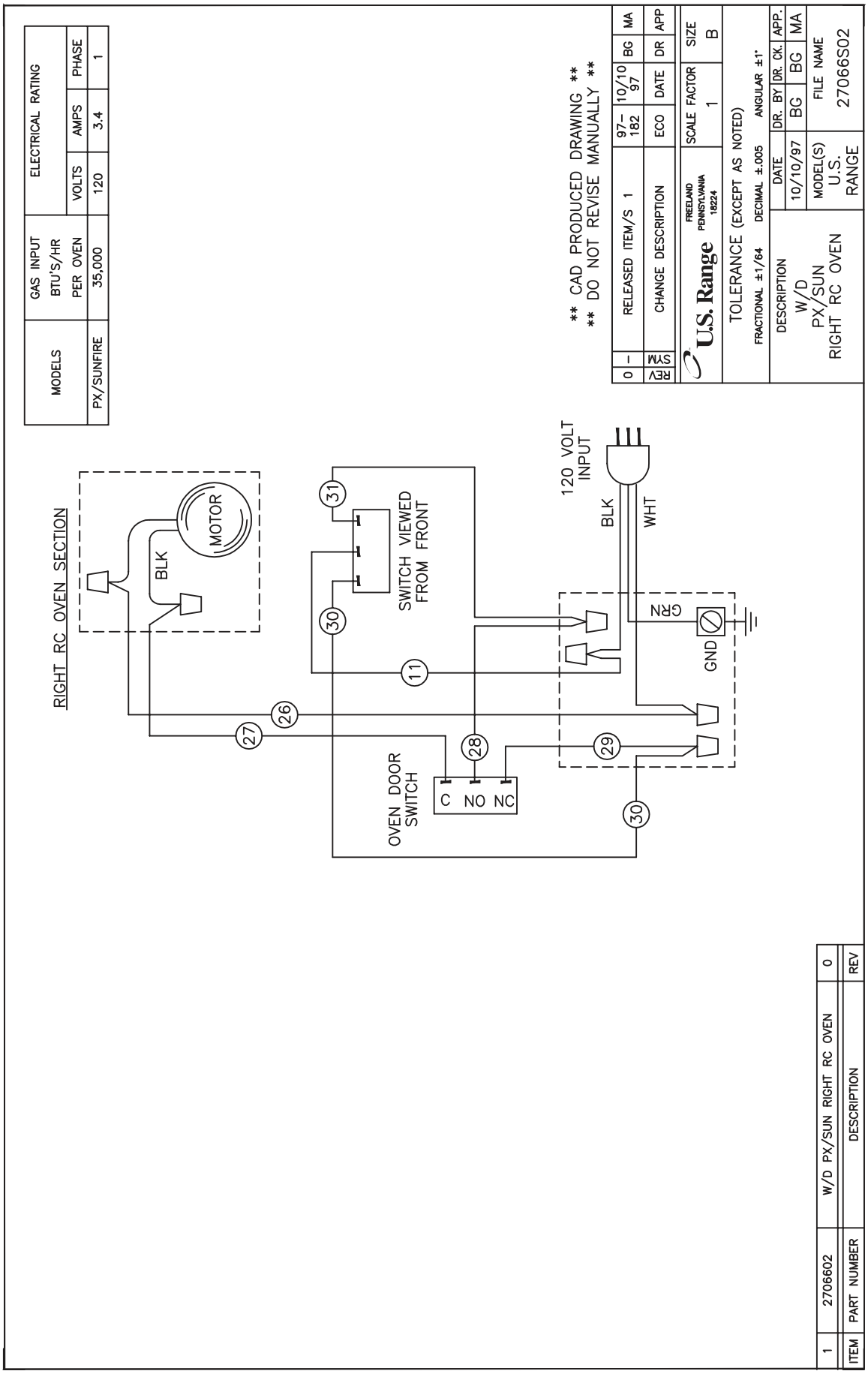
MODELS
GAS INPUT BTU'S/HR PER OVEN
ELECTRICAL RATING
VOLTS
AMPS
PHASE
PX/SUNFIRE
35,000
120
3.4
1
** CAD PRODUCED DRAWING **
** DO NOT REVISE MANUALLY **
REV
SYM
CHANGE DESCRIPTION
ECO
DATE
DR
APP
0
–
RELEASED ITEM/S 1
97-182
10/10/97
BG
MA
U.S. Range
FREELAND PENNSYLVANIA 18224
SCALE FACTOR 1
SIZE B
TOLERANCE (EXCEPT AS NOTED)
FRACTIONAL ±1/64
DECIMAL ±.005
ANGULAR ±1°
DESCRIPTION
W/D PX/SUN RIGHT RC OVEN
DATE
10/10/97
DR. BY
BG
DR. CK.
BG
APP.
MA
MODEL(S) U.S. RANGE
FILE NAME 27066S02
RIGHT RC OVEN SECTION
MOTOR
BLK
SWITCH VIEWED FROM FRONT
OVEN DOOR SWITCH
C NO NC
120 VOLT INPUT
BLK
WHT
GRN
GND
26
27
28
29
30
31
11
ITEM
PART NUMBER
DESCRIPTION
REV
1
2706602
W/D PX/SUN RIGHT RC OVEN
0

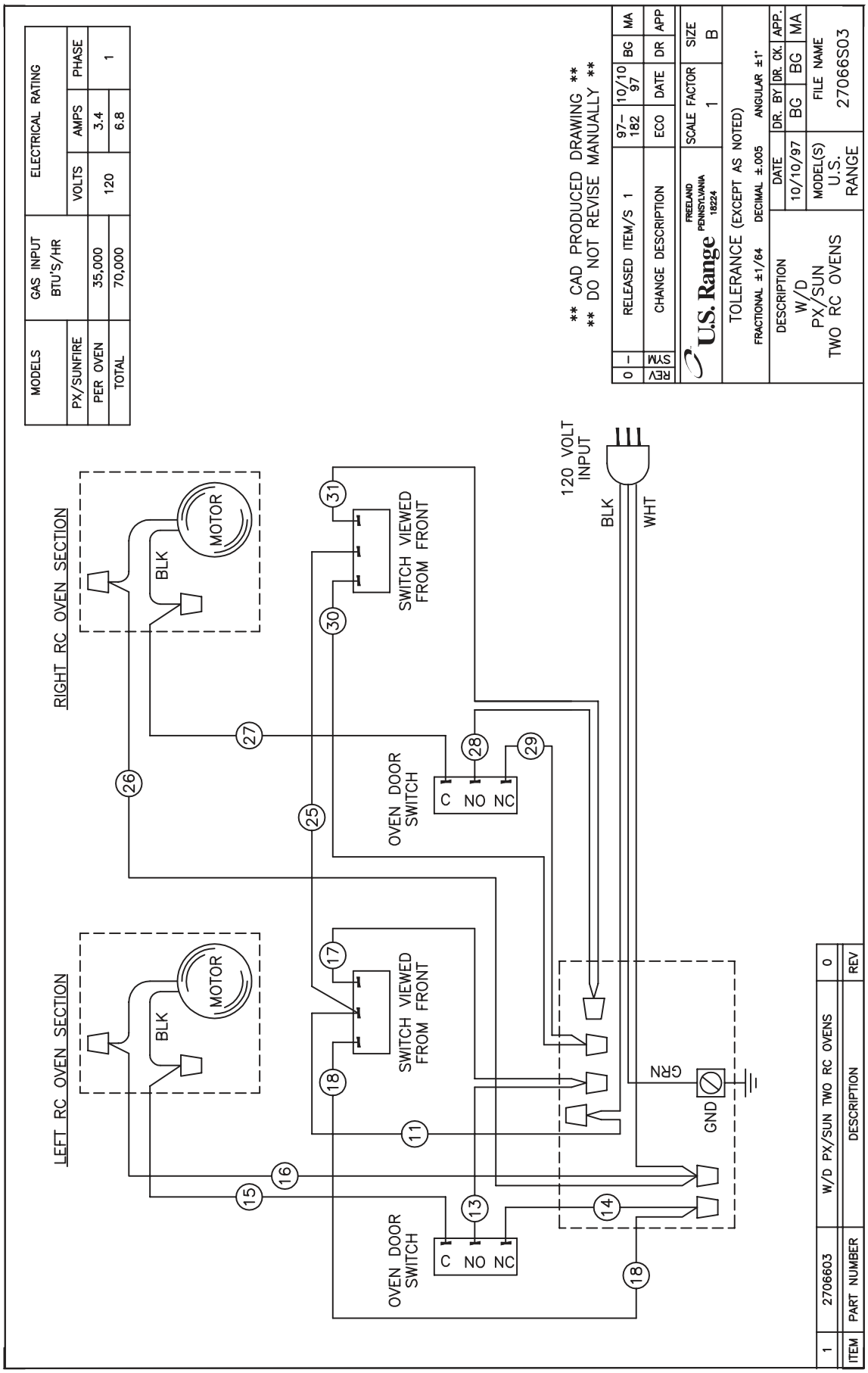
MODELS
GAS INPUT BTU'S/HR
ELECTRICAL RATING
PX/SUNFIRE
VOLTS
AMPS
PHASE
PER OVEN
35,000
120
3.4
1
TOTAL
70,000
6.8
** CAD PRODUCED DRAWING **
** DO NOT REVISE MANUALLY **
0 I RELEASED ITEM/S 1 97-182 10/10 97 BG MA
REV SYM CHANGE DESCRIPTION ECO DATE DR APP
U.S. Range
FREELAND PENNSYLVANIA 18224
SCALE FACTOR 1
SIZE B
TOLERANCE (EXCEPT AS NOTED)
FRACTIONAL ±1/64 DECIMAL ±.005 ANGULAR ±1°
DESCRIPTION W/D PX/SUN TWO RC OVENS
DATE 10/10/97
DR. BY BG
DR. CK. BG
APP. MA
MODEL(S) U.S. RANGE
FILE NAME 27066S03
RIGHT RC OVEN SECTION
LEFT RC OVEN SECTION
MOTOR
BLK
SWITCH VIEWED FROM FRONT
OVEN DOOR SWITCH
C NO NC
120 VOLT INPUT
BLK
WHT
GRN
GND
1 2706603 W/D PX/SUN TWO RC OVENS 0
ITEM PART NUMBER DESCRIPTION REV

MODELS	GAS INPUT BTU'S/HR PER OVEN	ELECTRICAL RATING		
		VOLTS	AMPS	PHASE
PX/SUNFIRE	35,000	120	3.4	1

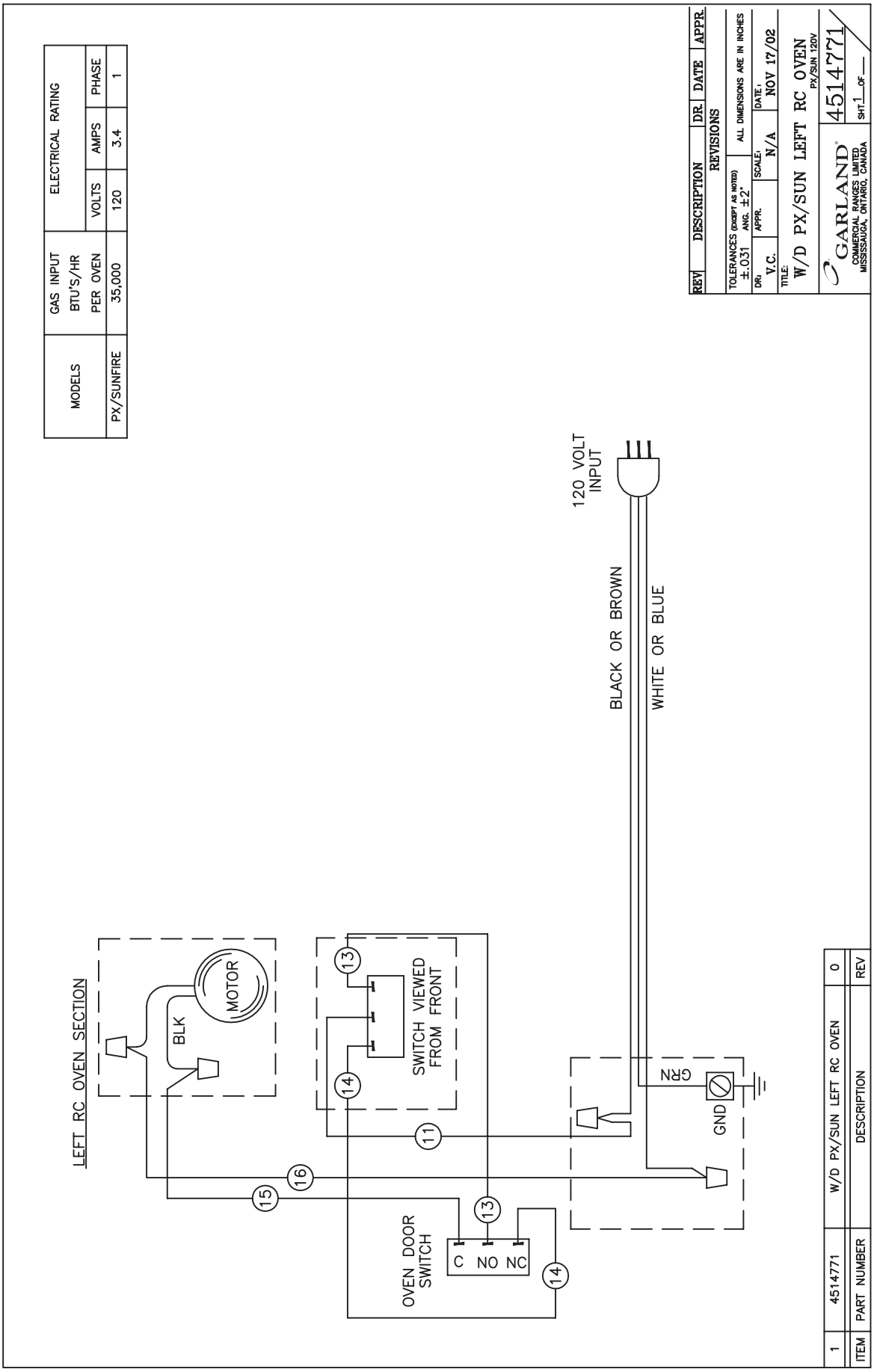

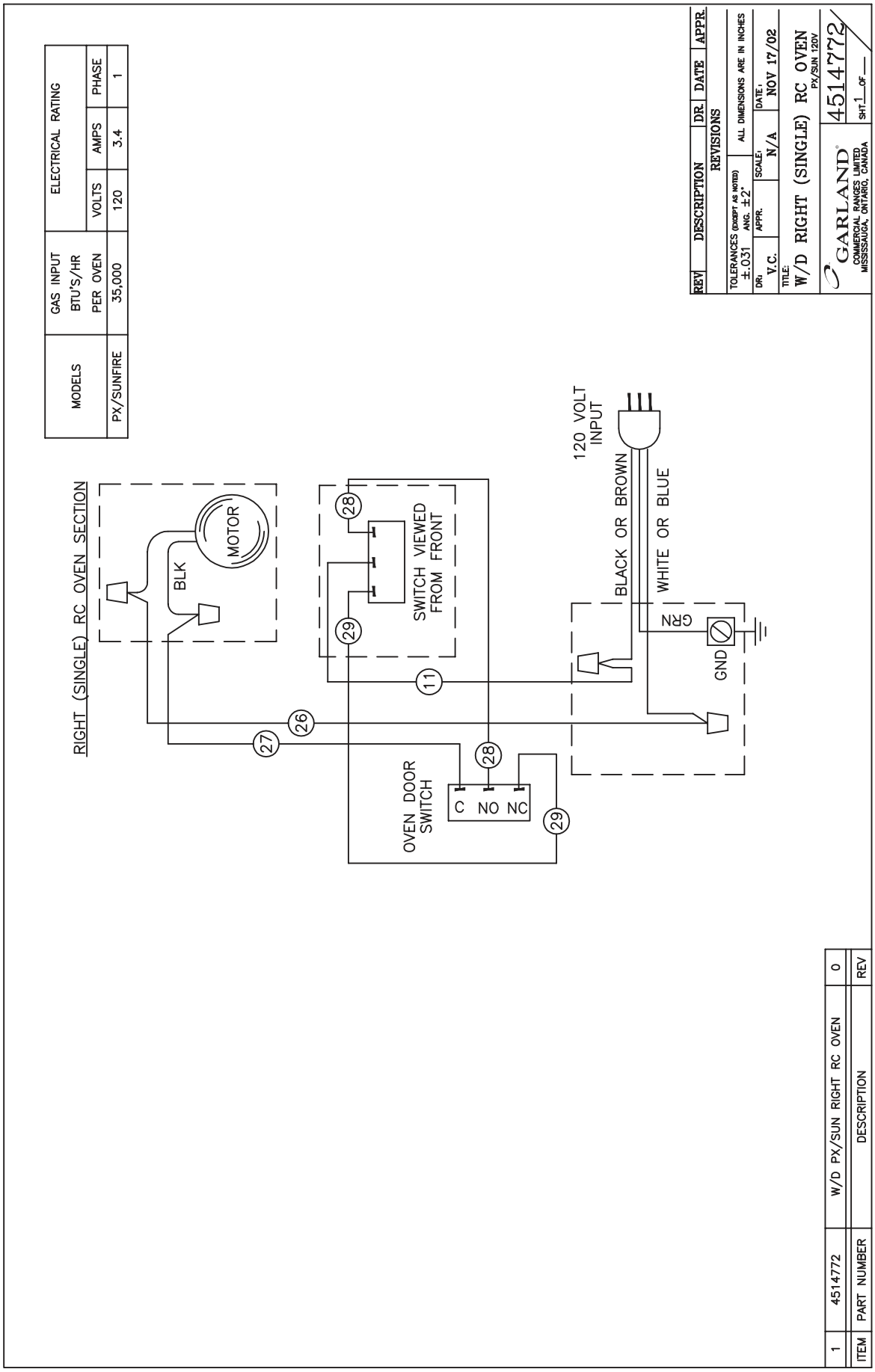
MODELS
GAS INPUT BTU'S/HR PER OVEN
ELECTRICAL RATING
VOLTS
AMPS
PHASE
PX/SUNFIRE
35,000
120
3.4
1
RIGHT (SINGLE) RC OVEN SECTION
MOTOR
BLK
SWITCH VIEWED FROM FRONT
28
29
11
26
27
28
29
OVEN DOOR SWITCH
C NO NC
120 VOLT INPUT
BLACK OR BROWN
WHITE OR BLUE
GRN
GND
REV
DESCRIPTION
DR.
DATE
APPR.
REVISIONS
TOLERANCES (EXCEPT AS NOTED) ±.031 ANG. ±2°
ALL DIMENSIONS ARE IN INCHES
DR: V.C.
APPR.
SCALE: N/A
DATE: NOV 17/02
TITLE: W/D RIGHT (SINGLE) RC OVEN PX/SUN 120V
GARLAND
COMMERCIAL RANGES LIMITED MISSISSAUGA, ONTARIO, CANADA
4514772
SHT 1 OF
1
4514772
W/D PX/SUN RIGHT RC OVEN
0
ITEM
PART NUMBER
DESCRIPTION
REV

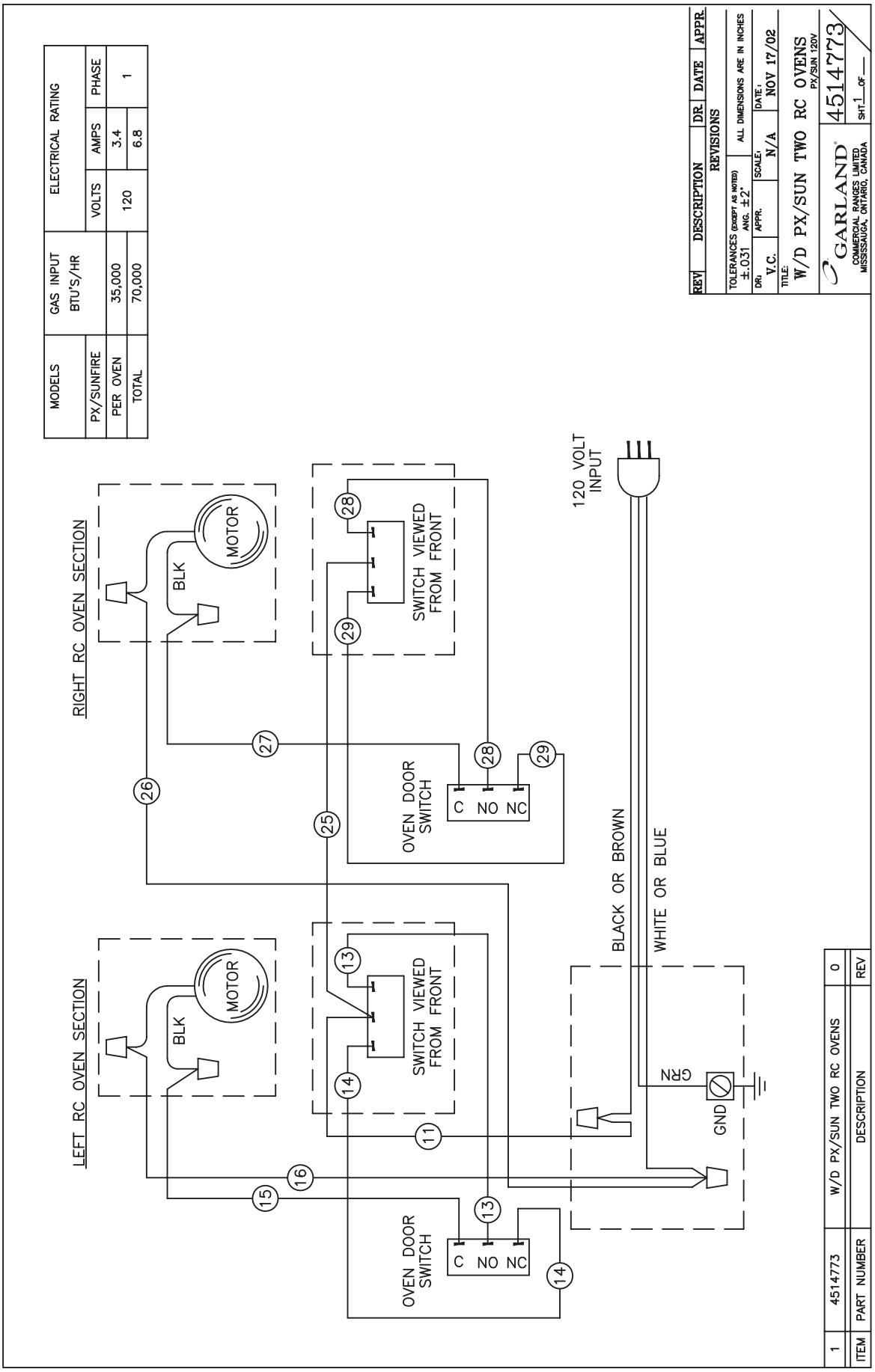
MODELS
GAS INPUT BTU'S/HR
ELECTRICAL RATING
VOLTS
AMPS
PHASE
PX/SUNFIRE
PER OVEN 35,000 120 3.4 1
TOTAL 70,000 6.8
REV DESCRIPTION DR. DATE APPR.
REVISIONS
TOLERANCES (EXCEPT AS NOTED) ±.031 ANG. ±2°
ALL DIMENSIONS ARE IN INCHES
DR: V.C.
APPR.
SCALE: N/A
DATE: NOV 17/02
TITLE: W/D PX/SUN TWO RC OVENS
PX/SUN 120V
GARLAND
COMMERCIAL RANGES LIMITED
MISSISSAUGA, ONTARIO, CANADA
4514773
SHT 1 OF —
RIGHT RC OVEN SECTION
LEFT RC OVEN SECTION
MOTOR
BLK
SWITCH VIEWED FROM FRONT
OVEN DOOR SWITCH
C NO NC
120 VOLT INPUT
BLACK OR BROWN
WHITE OR BLUE
GRN
GND
26
27
28
29
25
13
14
11
15
16
1 4514773 W/D PX/SUN TWO RC OVENS 0
ITEM PART NUMBER DESCRIPTION REV

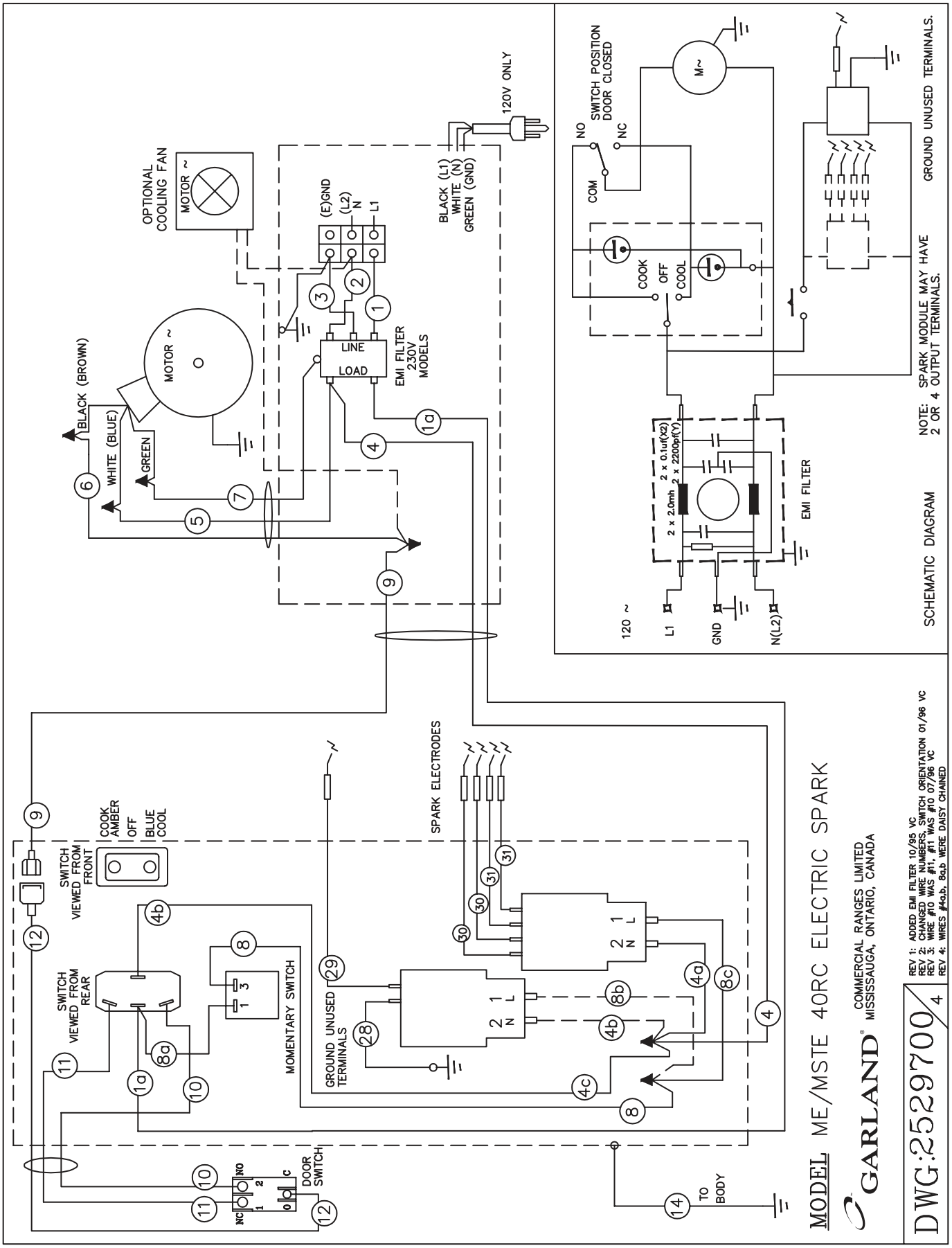
OPTIONAL COOLING FAN
MOTOR ~
120V ONLY
BLACK (L1)
WHITE (N)
GREEN (GND)
(E)GND
(L2) N
L1
LINE
LOAD
EMI FILTER 230V MODELS
MOTOR ~
BLACK (BROWN)
WHITE (BLUE)
GREEN
SWITCH POSITION DOOR CLOSED
NO
NC
COM
COOK
OFF
COOL
M~
GROUND UNUSED TERMINALS.
NOTE: SPARK MODULE MAY HAVE 2 OR 4 OUTPUT TERMINALS.
2 x 0.1uf(X2)
2 x 2200pf(Y)
2 x 2.0mh
EMI FILTER
120 ~
L1
GND
N(L2)
SCHEMATIC DIAGRAM
SPARK ELECTRODES
COOK
AMBER
OFF
BLUE
COOL
SWITCH VIEWED FROM FRONT
SWITCH VIEWED FROM REAR
MOMENTARY SWITCH
GROUND UNUSED TERMINALS
DOOR SWITCH
TO BODY
MODEL ME/MSTE 40RC ELECTRIC SPARK
GARLAND
COMMERCIAL RANGES LIMITED
MISSISSAUGA, ONTARIO, CANADA
DWG:2529700/4
REV 1: ADDED EMI FILTER 10/95 VC
REV 2: CHANGED WIRE NUMBERS, SWITCH ORIENTATION 01/96 VC
REV 3: WIRE #10 WAS #11, #11 WAS #10 07/96 VC
REV 4: WIRES #4a,b, 8a,b WERE DAISY CHAINED

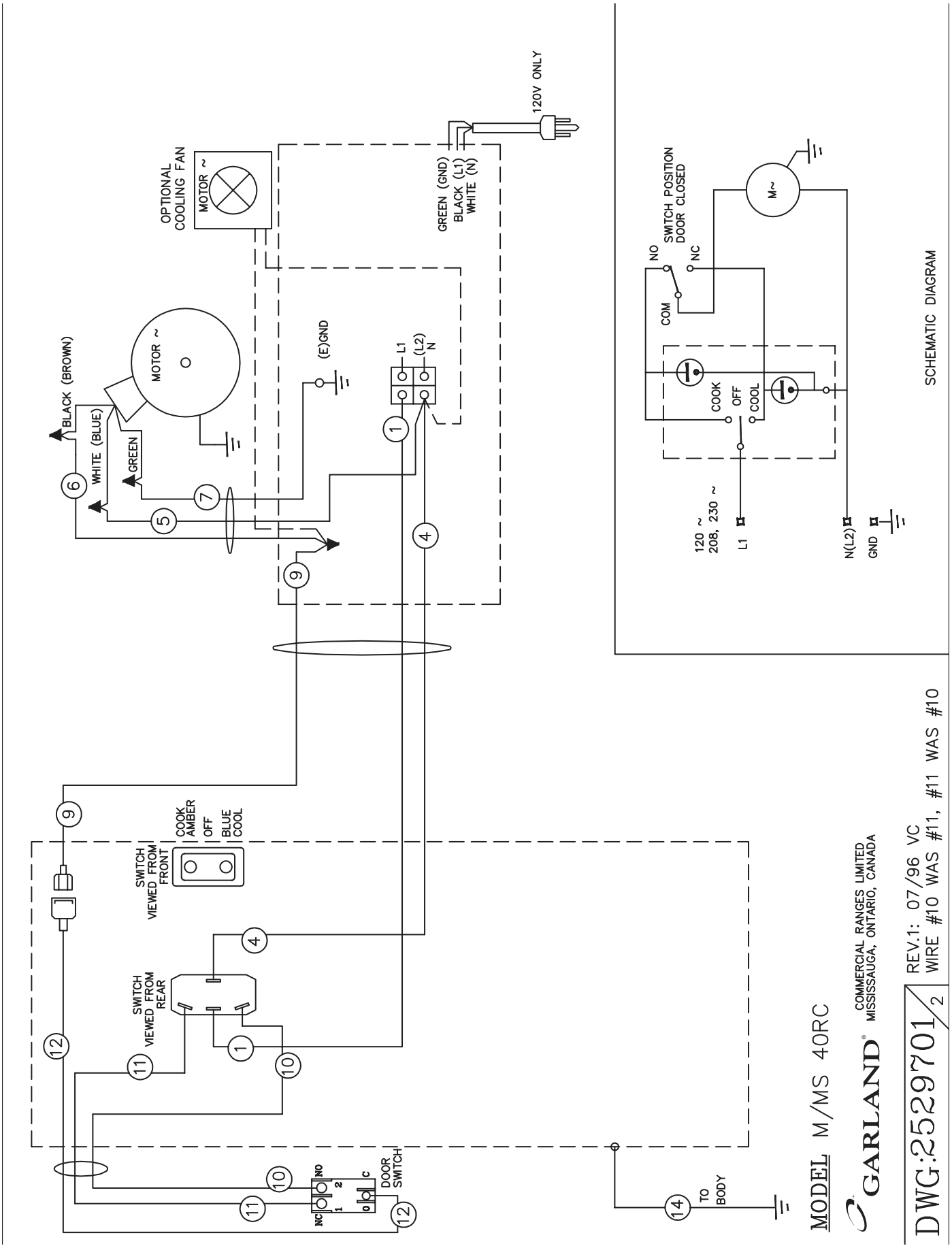
120V ONLY
OPTIONAL COOLING FAN
MOTOR ~
GREEN (GND)
BLACK (L1)
WHITE (N)
BLACK (BROWN)
WHITE (BLUE)
GREEN
MOTOR ~
(E)GND
L1
(L2) N
SWITCH POSITION DOOR CLOSED
NO
NC
COM
M~
COOK
OFF
COOL
120 ~ 208, 230 ~
L1
N(L2)
GND
SCHEMATIC DIAGRAM
COOK AMBER
OFF
BLUE COOL
SWITCH VIEWED FROM FRONT
SWITCH VIEWED FROM REAR
DOOR SWITCH
NO
NC
C
TO BODY
MODEL M/MS 40RC
GARLAND
COMMERCIAL RANGES LIMITED
MISSISSAUGA, ONTARIO, CANADA
DWG:2529701/2
REV.1: 07/96 VC
WIRE #10 WAS #11, #11 WAS #10

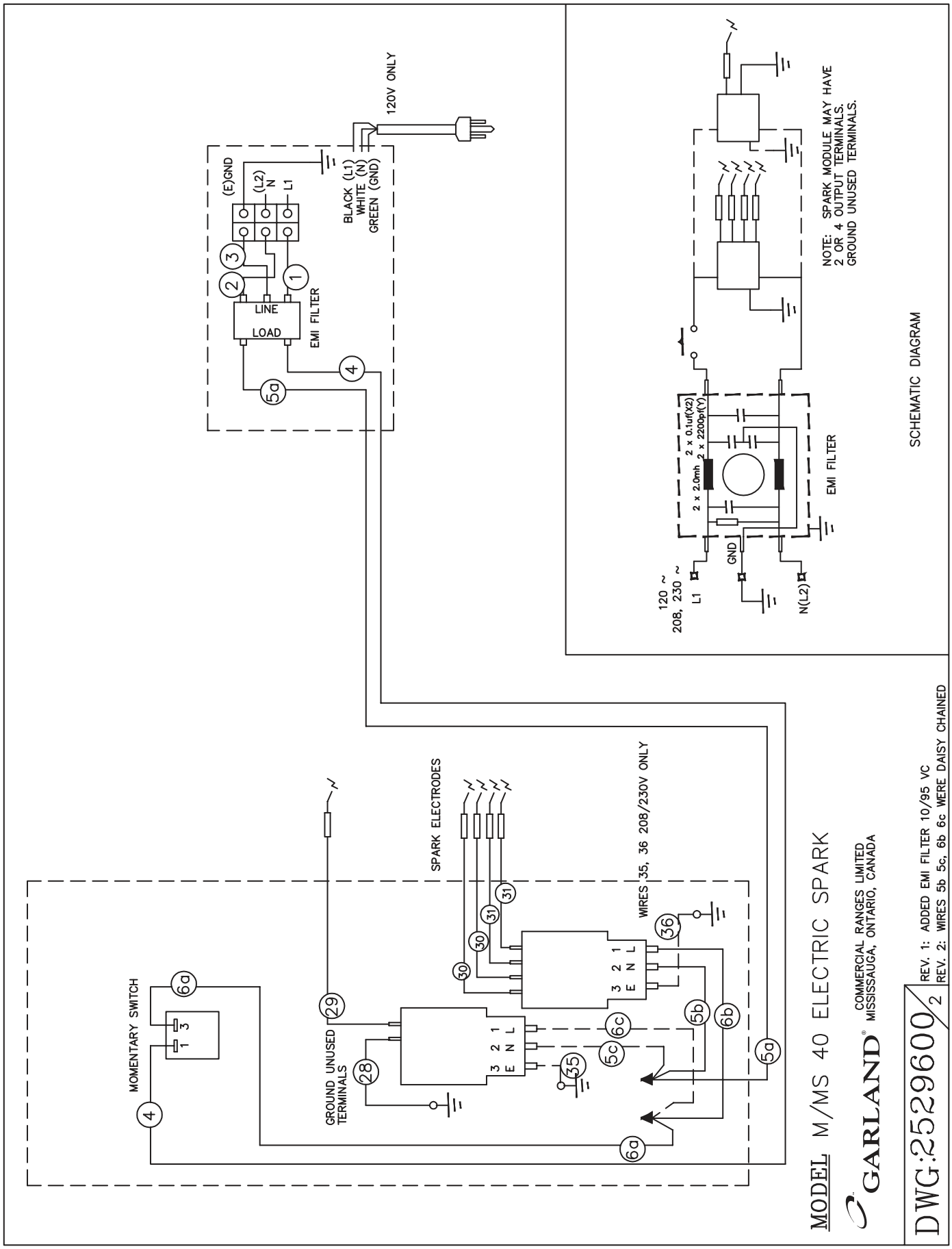
120V ONLY
(E)GND
(L2) N
L1
BLACK (L1)
WHITE (N)
GREEN (GND)
LINE
LOAD
EMI FILTER
NOTE: SPARK MODULE MAY HAVE 2 OR 4 OUTPUT TERMINALS. GROUND UNUSED TERMINALS.
2 x 0.1uf(X2)
2 x 2.0mh
2 x 2200pf(Y)
EMI FILTER
SCHEMATIC DIAGRAM
120 ~
208, 230 ~
L1
GND
N(L2)
SPARK ELECTRODES
WIRES 35, 36 208/230V ONLY
MOMENTARY SWITCH
GROUND UNUSED TERMINALS
MODEL M/MS 40 ELECTRIC SPARK
GARLAND
COMMERCIAL RANGES LIMITED
MISSISSAUGA, ONTARIO, CANADA
DWG:2529600/2
REV. 1: ADDED EMI FILTER 10/95 VC
REV. 2: WIRES 5b 5c, 6b 6c WERE DAISY CHAINED

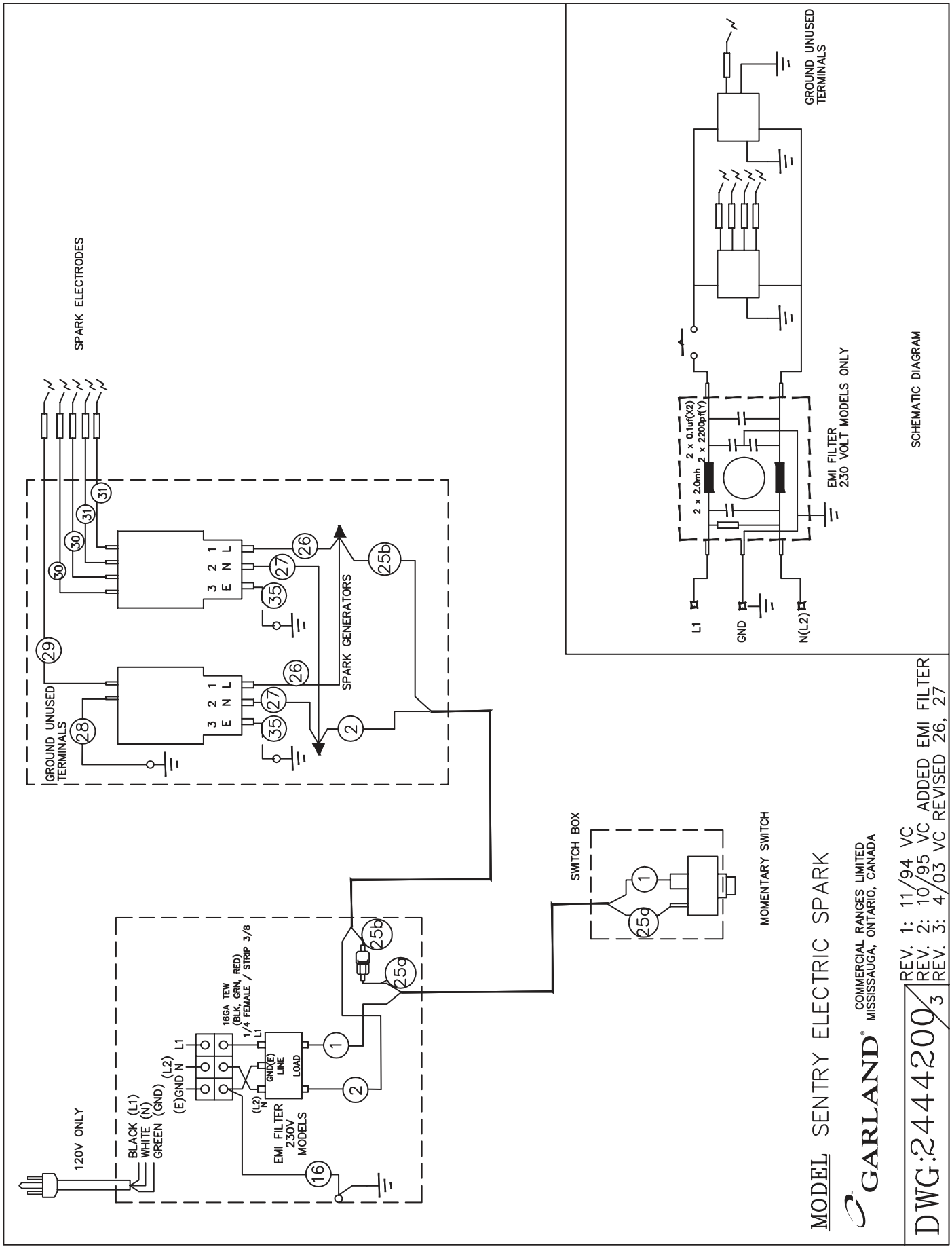
SPARK ELECTRODES
GROUND UNUSED TERMINALS
SPARK GENERATORS
120V ONLY
BLACK (L1)
WHITE (N)
GREEN (GND)
(E)GND N (L2)
L1
16GA TEW (BLK, GRN, RED)
1/4 FEMALE / STRIP 3/8
GND(E)
LINE
LOAD
EMI FILTER 230V MODELS
SWITCH BOX
MOMENTARY SWITCH
GROUND UNUSED TERMINALS
2 x 0.1uf(X2)
2 x 2200pf(Y)
2 x 2.0mh
EMI FILTER 230 VOLT MODELS ONLY
L1
GND
N(L2)
SCHEMATIC DIAGRAM
MODEL SENTRY ELECTRIC SPARK
GARLAND
COMMERCIAL RANGES LIMITED
MISSISSAUGA, ONTARIO, CANADA
DWG:2444200/3
REV. 1: 11/94 VC
REV. 2: 10/95 VC ADDED EMI FILTER
REV. 3: 4/03 VC REVISED 26, 27

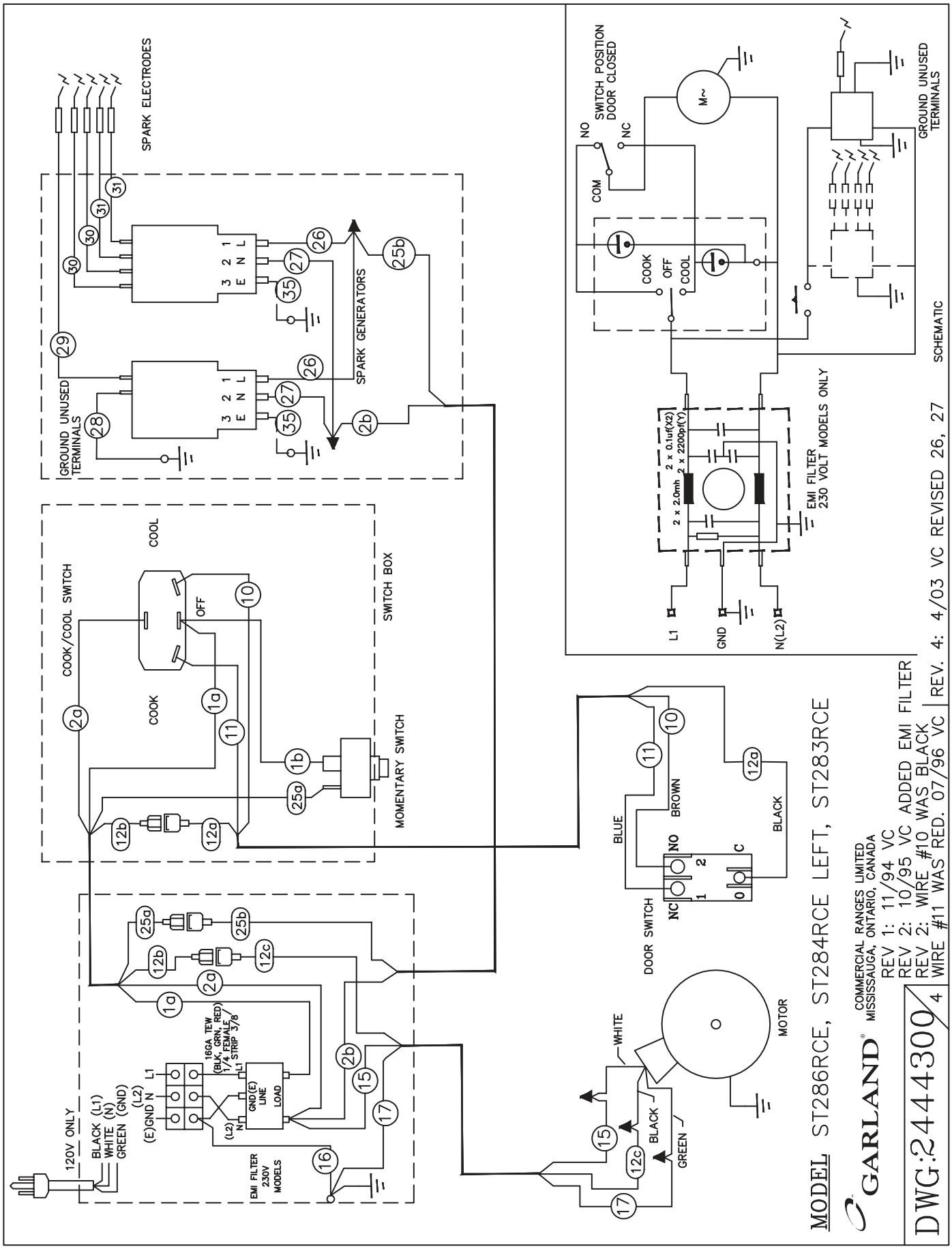
SPARK ELECTRODES
GROUND UNUSED TERMINALS
SPARK GENERATORS
COOK/COOL SWITCH
COOL
OFF
COOK
SWITCH BOX
MOMENTARY SWITCH
120V ONLY
BLACK (L1)
WHITE (N)
GREEN (GND)
(E)GND N
(L2)
L1
16GA. TEW (BLK, GRN, RED) 1/4" FEMALE/ STRIP 3/8"
GND(E) LINE
LOAD
EMI FILTER 230V MODELS
DOOR SWITCH
NO
NC
C
BLUE
BROWN
BLACK
WHITE
GREEN
MOTOR
SWITCH POSITION DOOR CLOSED
COM
M~
2 x 2.0mh
2 x 0.1uf(X2)
2 x 2200pf(Y)
EMI FILTER 230 VOLT MODELS ONLY
GND
N(L2)
GROUND UNUSED TERMINALS
SCHEMATIC
MODEL ST286RCE, ST284RCE LEFT, ST283RCE
GARLAND
COMMERCIAL RANGES LIMITED
MISSISSAUGA, ONTARIO, CANADA
REV 1: 11/94 VC
REV 2: 10/95 VC ADDED EMI FILTER
REV 2: WIRE #10 WAS BLACK
WIRE #11 WAS RED. 07/96 VC
REV. 4: 4/03 VC REVISED 26, 27
DWG:2444300/4

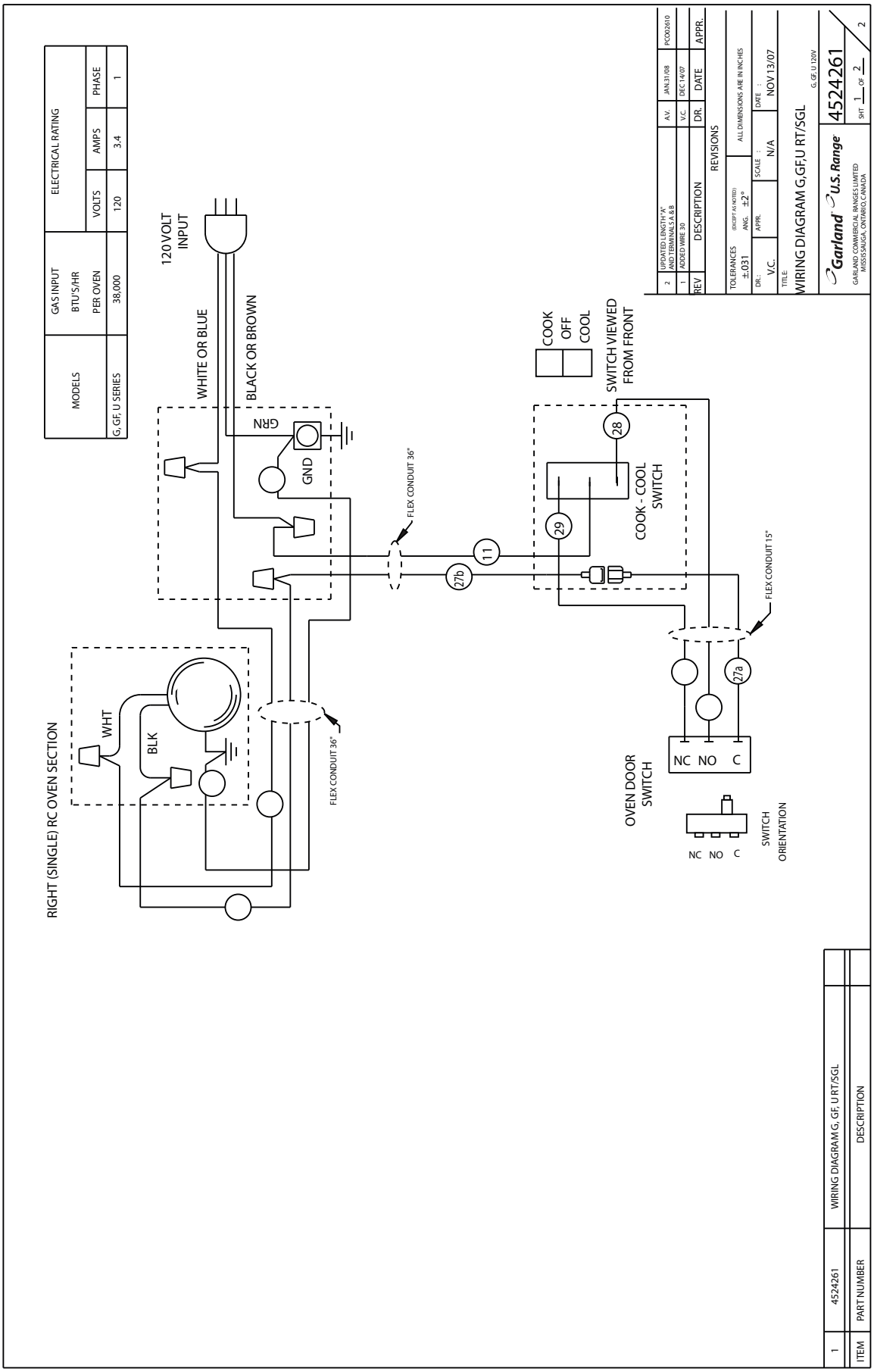
MODELS
G, GF, U SERIES
GAS INPUT BTU'S/HR PER OVEN
38,000
ELECTRICAL RATING
VOLTS
120
AMPS
3.4
PHASE
1
120 VOLT INPUT
WHITE OR BLUE
BLACK OR BROWN
GRN
GND
FLEX CONDUIT 36"
FLEX CONDUIT 36"
FLEX CONDUIT 15"
RIGHT (SINGLE) RC OVEN SECTION
WHT
BLK
COOK
OFF
COOL
SWITCH VIEWED FROM FRONT
COOK - COOL SWITCH
28
29
11
27b
27a
OVEN DOOR SWITCH
NC NO C
NC NO C
SWITCH ORIENTATION
REVISIONS
2 UPDATED LENGTH "A" AND TERMINALS A & B
1 ADDED WIRE 30
REV DESCRIPTION
A.V. JAN.31/08 PCO02610
V.C. DEC 14/07
DR. DATE APPR.
TOLERANCES ±.031 (EXCEPT AS NOTED) ANG. ±2°
ALL DIMENSIONS ARE IN INCHES
DR.: V.C.
APPR.
SCALE : N/A
DATE : NOV 13/07
TITLE: WIRING DIAGRAM G,GF,U RT/SGL
G, GF, U 120V
Garland U.S. Range
GARLAND COMMERCIAL RANGES LIMITED
MISSISSAUGA, ONTARIO, CANADA
4524261
SHT 1 OF 2
2
1 4524261 WIRING DIAGRAM G, GF, U RT/SGL
ITEM PART NUMBER DESCRIPTION

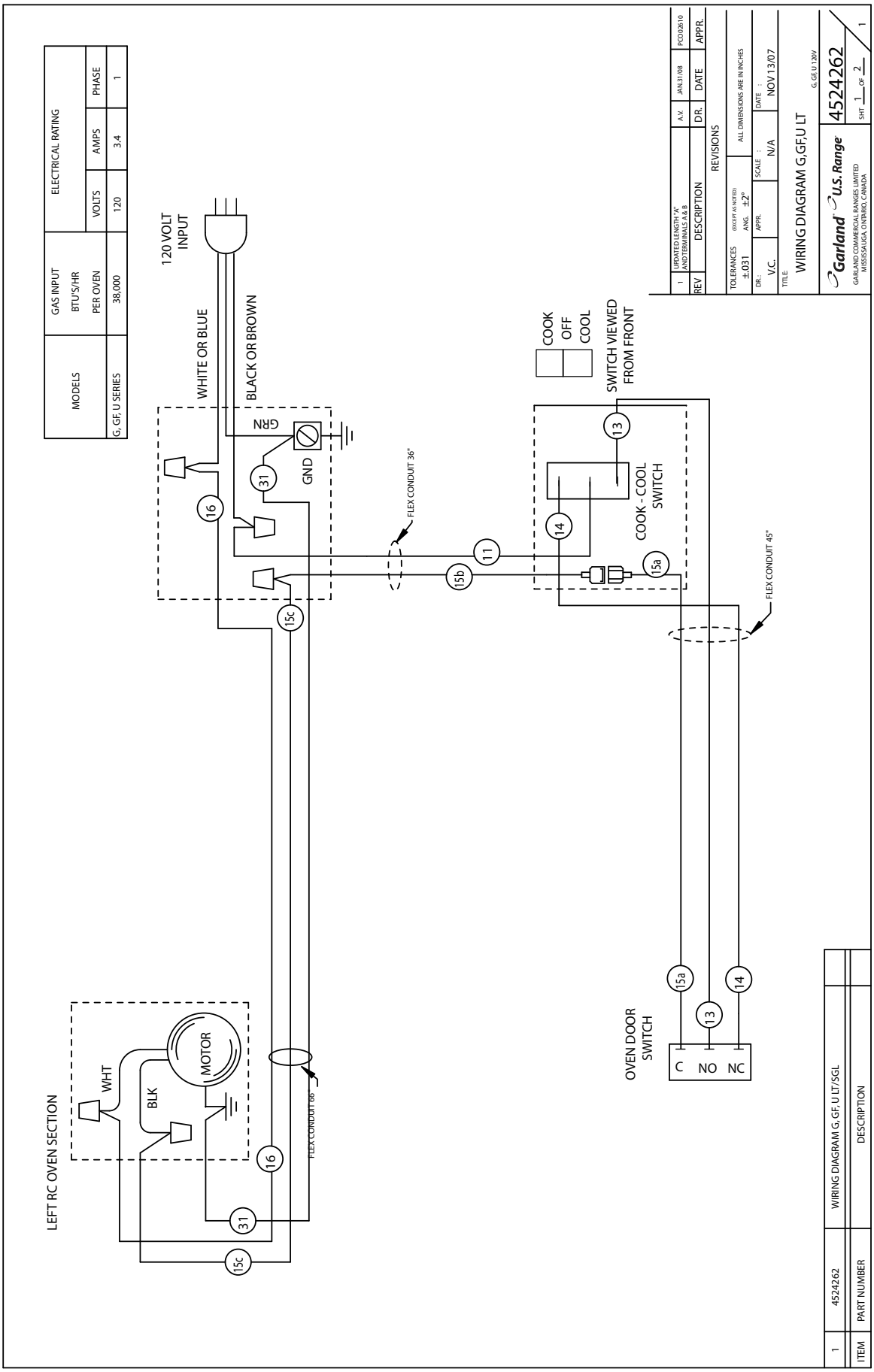
MODELS
GAS INPUT BTU'S/HR PER OVEN
ELECTRICAL RATING
VOLTS
AMPS
PHASE
G, GF, U SERIES
38,000
120
3.4
1
120 VOLT INPUT
WHITE OR BLUE
BLACK OR BROWN
GRN
GND
31
16
15c
FLEX CONDUIT 36"
11
15b
14
13
15a
COOK - COOL SWITCH
COOK
OFF
COOL
SWITCH VIEWED FROM FRONT
FLEX CONDUIT 45"
OVEN DOOR SWITCH
C
NO
NC
LEFT RC OVEN SECTION
WHT
BLK
MOTOR
FLEX CONDUIT 66"
REV
DESCRIPTION
DR.
DATE
APPR.
REVISIONS
TOLERANCES
±.031
(EXCEPT AS NOTED)
ANG. ±2°
ALL DIMENSIONS ARE IN INCHES
DR.
V.C.
APPR.
SCALE :
N/A
DATE :
NOV 13/07
TITLE
WIRING DIAGRAM G,GF,U LT
G, GF, U 120V
Garland
U.S. Range
GARLAND COMMERCIAL RANGES LIMITED
MISSISSAUGA, ONTARIO, CANADA
4524262
SHT 1 OF 2
ITEM
PART NUMBER
DESCRIPTION
WIRING DIAGRAM G, GF, U LT/SGL

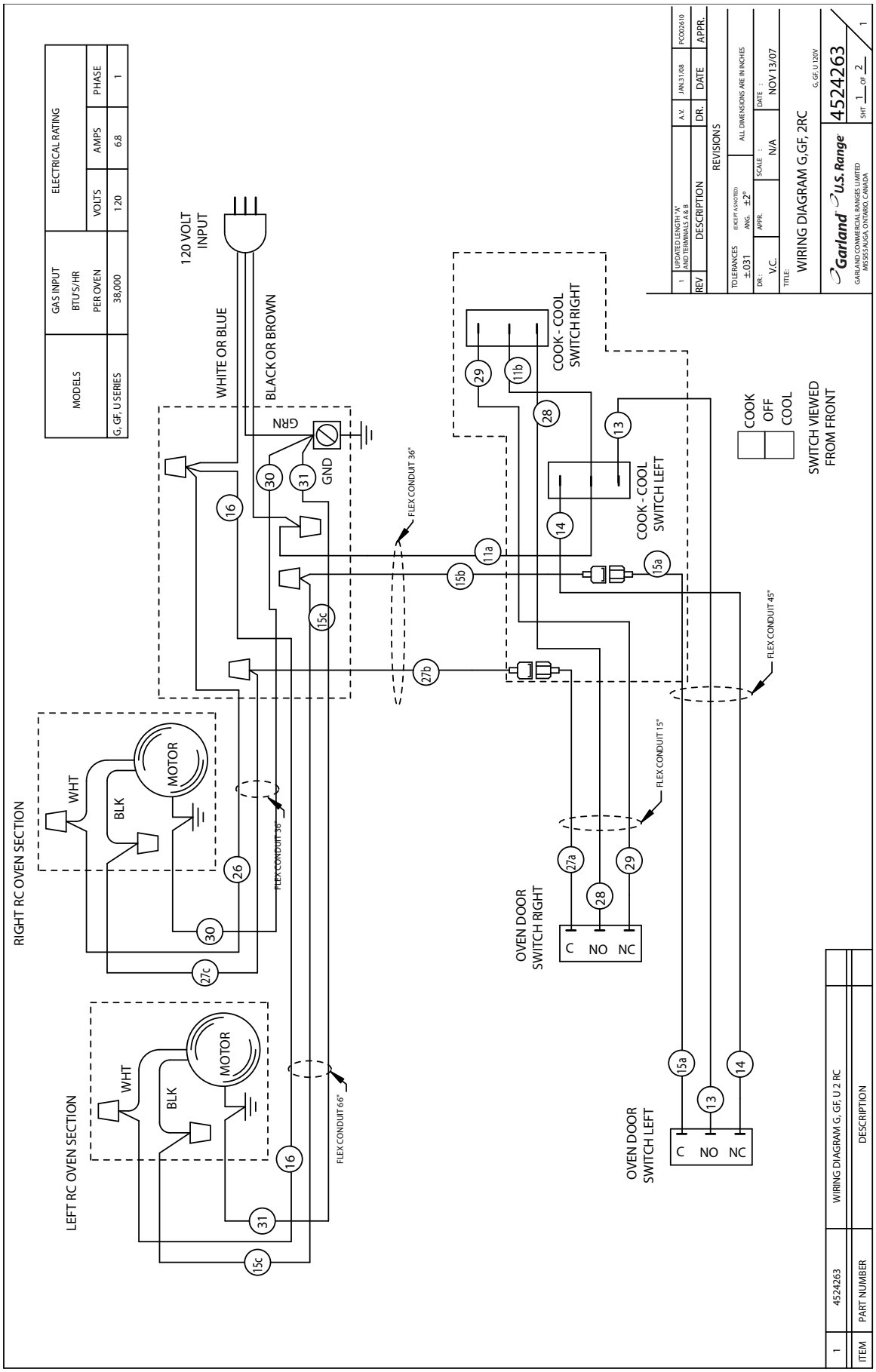
MODELS
G, GF, U SERIES
GAS INPUT BTU'S/HR PER OVEN
38,000
ELECTRICAL RATING
VOLTS 120
AMPS 6.8
PHASE 1
120 VOLT INPUT
WHITE OR BLUE
BLACK OR BROWN
GRN
GND
FLEX CONDUIT 36"
COOK - COOL SWITCH RIGHT
COOK - COOL SWITCH LEFT
COOK
OFF
COOL
SWITCH VIEWED FROM FRONT
FLEX CONDUIT 45"
FLEX CONDUIT 15"
RIGHT RC OVEN SECTION
WHT
BLK
MOTOR
FLEX CONDUIT 36"
LEFT RC OVEN SECTION
FLEX CONDUIT 66"
OVEN DOOR SWITCH RIGHT
C NO NC
OVEN DOOR SWITCH LEFT
REV DESCRIPTION DR. DATE APPR.
1 UPDATED LENGTH "A" AND TERMINALS A & B A.V. JAN.31/08 PCO2610
REVISIONS
TOLERANCES ±.031 (EXCEPT AS NOTED) ANG. ±2°
ALL DIMENSIONS ARE IN INCHES
DR.: V.C. APPR. SCALE : N/A DATE : NOV 13/07
TITLE: WIRING DIAGRAM G,GF, 2RC
G, GF, U 120V
Garland U.S. Range
GARLAND COMMERCIAL RANGES LIMITED MISSISSAUGA, ONTARIO, CANADA
4524263
SHT 1 OF 2
1
1 4524263 WIRING DIAGRAM G, GF, U 2 RC
ITEM PART NUMBER DESCRIPTION

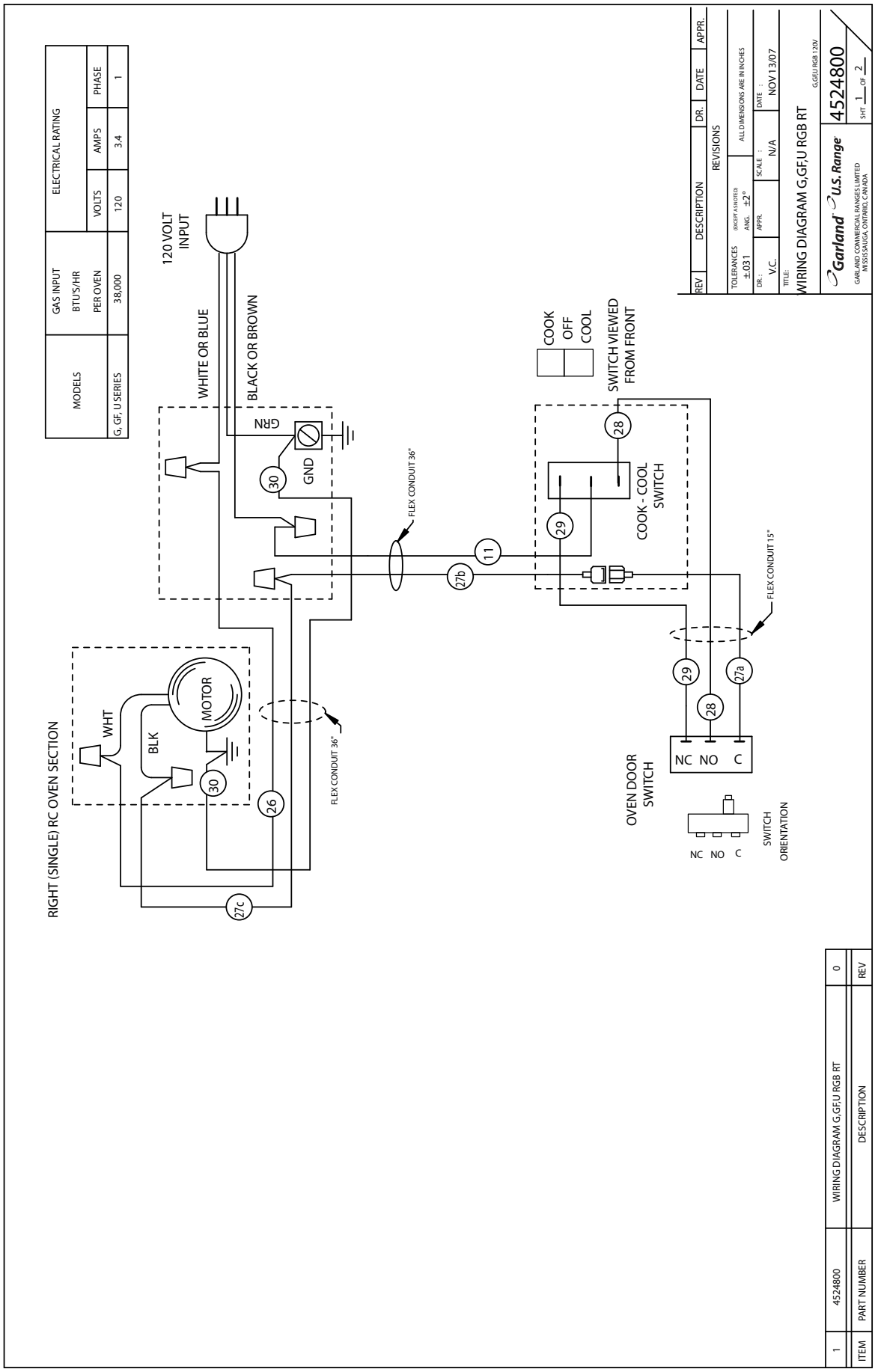
MODELS
GAS INPUT BTU'S/HR PER OVEN
ELECTRICAL RATING
VOLTS
AMPS
PHASE
G, GF, U SERIES
38,000
120
3.4
1
120 VOLT INPUT
WHITE OR BLUE
BLACK OR BROWN
GRN
GND
30
FLEX CONDUIT 36"
11
27b
29
28
COOK - COOL SWITCH
COOK
OFF
COOL
SWITCH VIEWED FROM FRONT
FLEX CONDUIT 15"
29
28
27a
NC NO C
OVEN DOOR SWITCH
NC NO C
SWITCH ORIENTATION
RIGHT (SINGLE) RC OVEN SECTION
WHT
BLK
MOTOR
30
26
27c
FLEX CONDUIT 36"
REV
DESCRIPTION
DR.
DATE
APPR.
REVISIONS
TOLERANCES ±.031 (EXCEPT AS NOTED) ANG. ±2°
ALL DIMENSIONS ARE IN INCHES
DR.: V.C.
APPR.:
SCALE: N/A
DATE: NOV 13/07
TITLE: WIRING DIAGRAM G,GF,U RGB RT
G,GF,U RGB 120V
Garland U.S. Range
GARLAND COMMERCIAL RANGES LIMITED MISSISSAUGA, ONTARIO, CANADA
4524800
SHT 1 OF 2
1
4524800
WIRING DIAGRAM G,GF,U RGB RT
0
ITEM
PART NUMBER
DESCRIPTION
REV

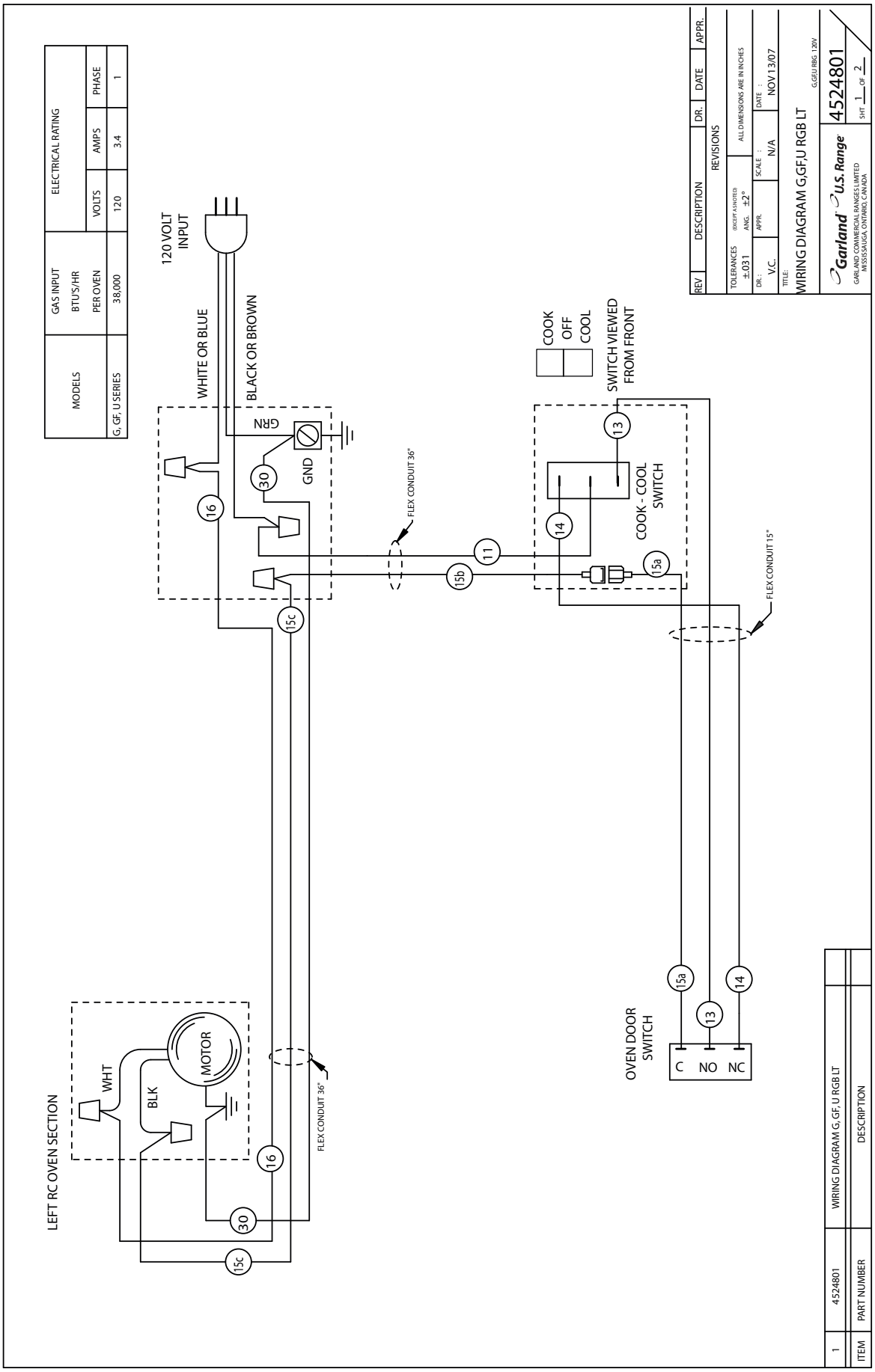
MODELS
G, GF, U SERIES
GAS INPUT BTUS/HR PER OVEN
38,000
ELECTRICAL RATING
VOLTS
120
AMPS
3.4
PHASE
1
120 VOLT INPUT
WHITE OR BLUE
BLACK OR BROWN
GRN
GND
16
30
15c
FLEX CONDUIT 36"
11
15b
14
13
15a
COOK - COOL SWITCH
COOK
OFF
COOL
SWITCH VIEWED FROM FRONT
FLEX CONDUIT 15"
OVEN DOOR SWITCH
C NO NC
LEFT RC OVEN SECTION
WHT
BLK
MOTOR
REV
DESCRIPTION
DR.
DATE
APPR.
REVISIONS
TOLERANCES ±.031 (EXCEPT AS NOTED) ANG. ±2°
ALL DIMENSIONS ARE IN INCHES
DR.: V.C.
APPR.
SCALE : N/A
DATE : NOV 13/07
TITLE: WIRING DIAGRAM G,GF,U RGB LT
G,GFU RBG 120V
Garland U.S. Range
GARLAND COMMERCIAL RANGES LIMITED MISSISSAUGA, ONTARIO, CANADA
4524801
SHT 1 OF 2
1 4524801 WIRING DIAGRAM G, GF, U RGB LT
ITEM PART NUMBER DESCRIPTION

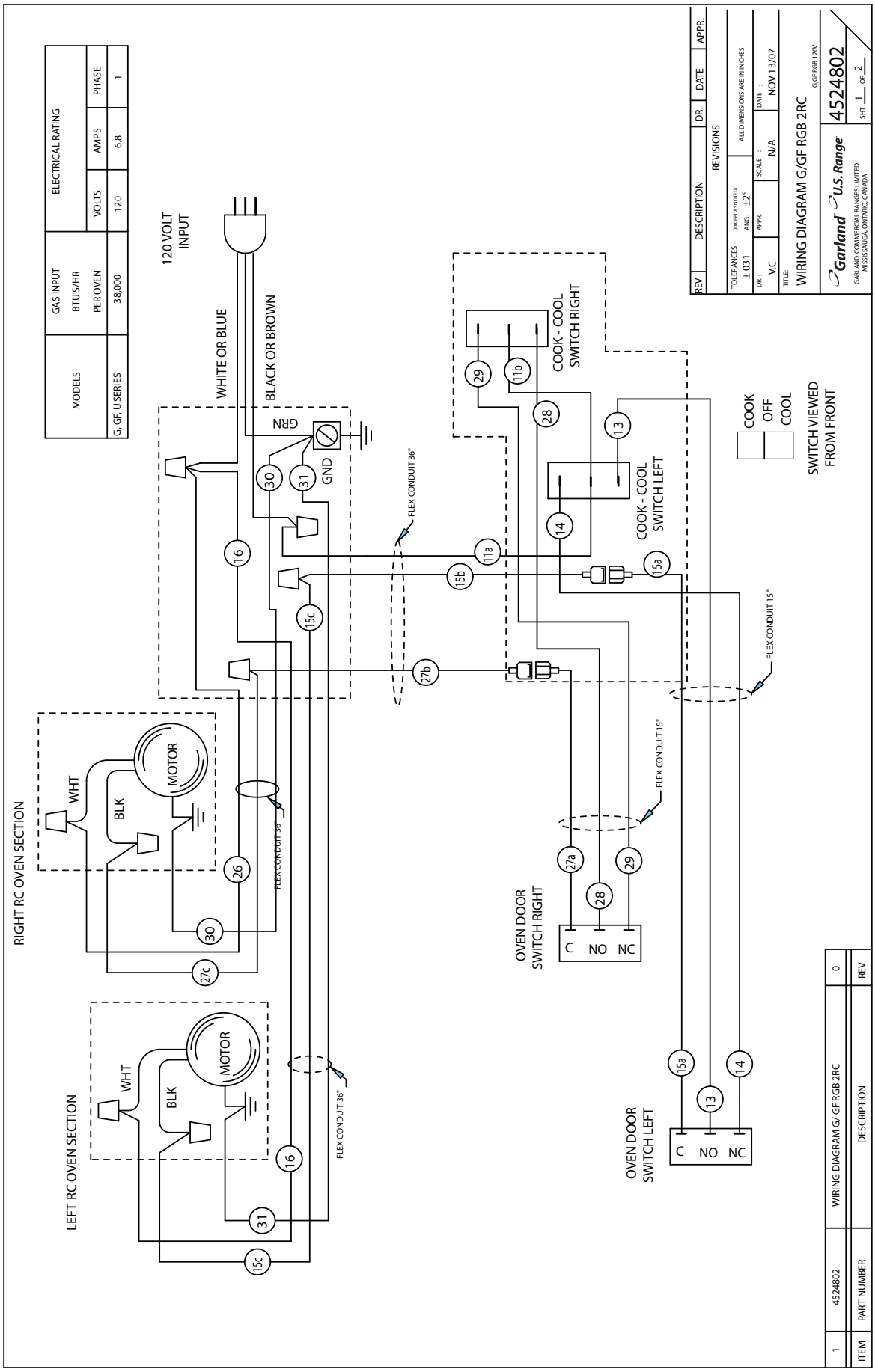
MODELS
GAS INPUT BTU'S/HR PER OVEN
ELECTRICAL RATING
VOLTS
AMPS
PHASE
G, GF, U SERIES
38,000
120
6.8
1
120 VOLT INPUT
WHITE OR BLUE
BLACK OR BROWN
GRN
GND
FLEX CONDUIT 36"
COOK - COOL SWITCH RIGHT
COOK - COOL SWITCH LEFT
COOK
OFF
COOL
SWITCH VIEWED FROM FRONT
FLEX CONDUIT 15"
RIGHT RC OVEN SECTION
LEFT RC OVEN SECTION
WHT
BLK
MOTOR
OVEN DOOR SWITCH RIGHT
OVEN DOOR SWITCH LEFT
C NO NC
REV DESCRIPTION DR. DATE APPR.
REVISIONS
TOLERANCES ±.031 (EXCEPT AS NOTED) ANG. ±2°
ALL DIMENSIONS ARE IN INCHES
DR.: V.C.
APPR.:
SCALE: N/A
DATE: NOV 13/07
TITLE: WIRING DIAGRAM G/GF RGB 2RC
G,GF RGB 120V
Garland U.S. Range
GARLAND COMMERCIAL RANGES LIMITED MISSISSAUGA, ONTARIO, CANADA
4524802
SHT 1 OF 2
1 4524802 WIRING DIAGRAM G/ GF RGB 2RC 0
ITEM PART NUMBER DESCRIPTION REV

30129 Sheet 2 of 3 Master Series Broiler/Range interconnection kit

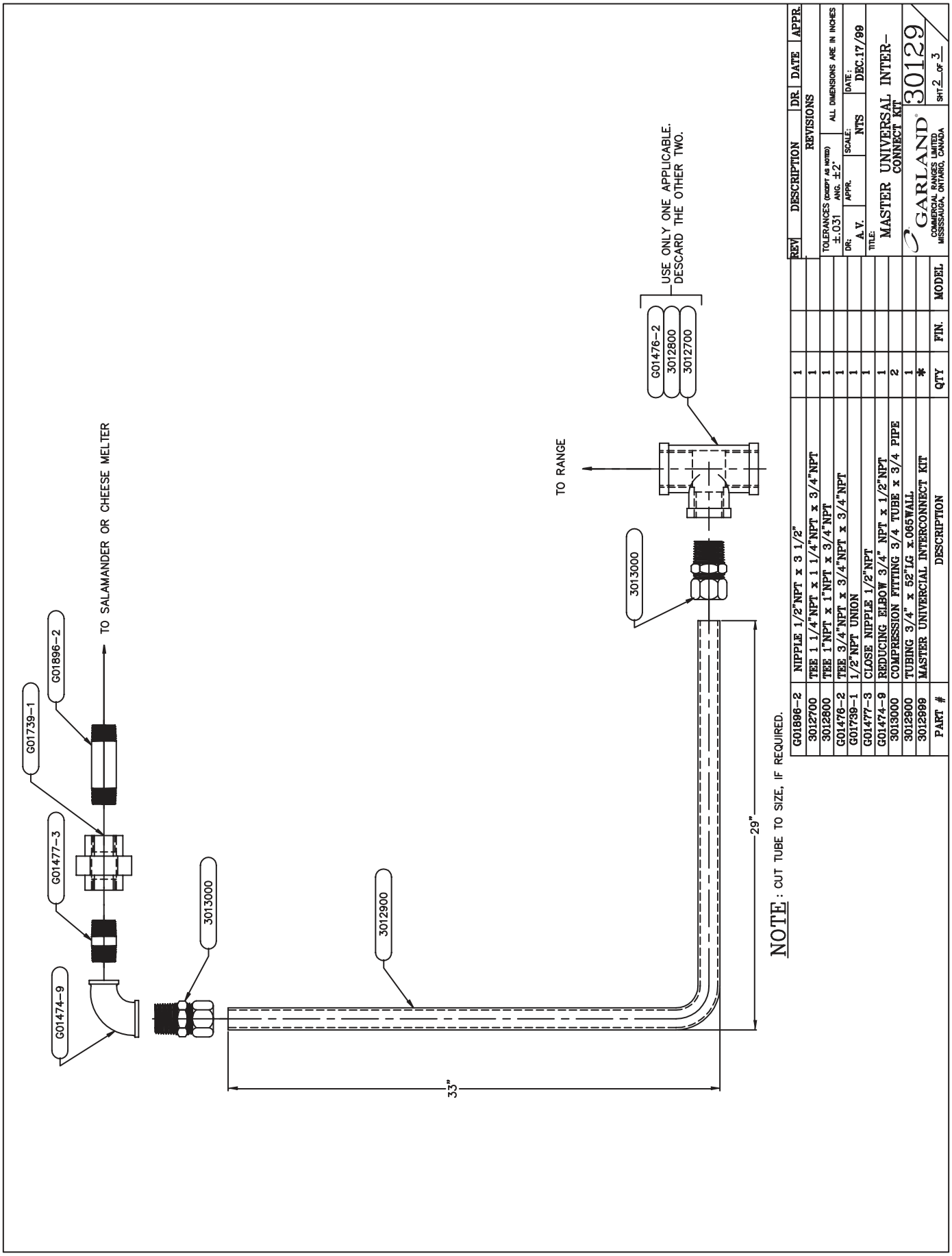

PART #	DESCRIPTION	QTY	FIN.	MODEL
G01896-2	NIPPLE 1/2"NPT x 3 1/2"	1		
3012700	TEE 1 1/4"NPT x 1 1/4"NPT x 3/4"NPT	1		
3012800	TEE 1"NPT x 1"NPT x 3/4"NPT	1		
G01476-2	TEE 3/4"NPT x 3/4"NPT x 3/4"NPT	1		
G01739-1	1/2"NPT UNION	1		
G01477-3	CLOSE NIPPLE 1/2"NPT	1		
G01474-9	REDUCING ELBOW 3/4" NPT x 1/2"NPT	1		
3013000	COMPRESSION FITTING 3/4 TUBE x 3/4 PIPE	2		
3012900	TUBING 3/4" x 52"LG x.065WALL	1		
3012999	MASTER UNIVERCIAL INTERCONNECT KIT	*		

30129 Sheet 3 of 3 Restaurant Series Broiler Range interconnection kit

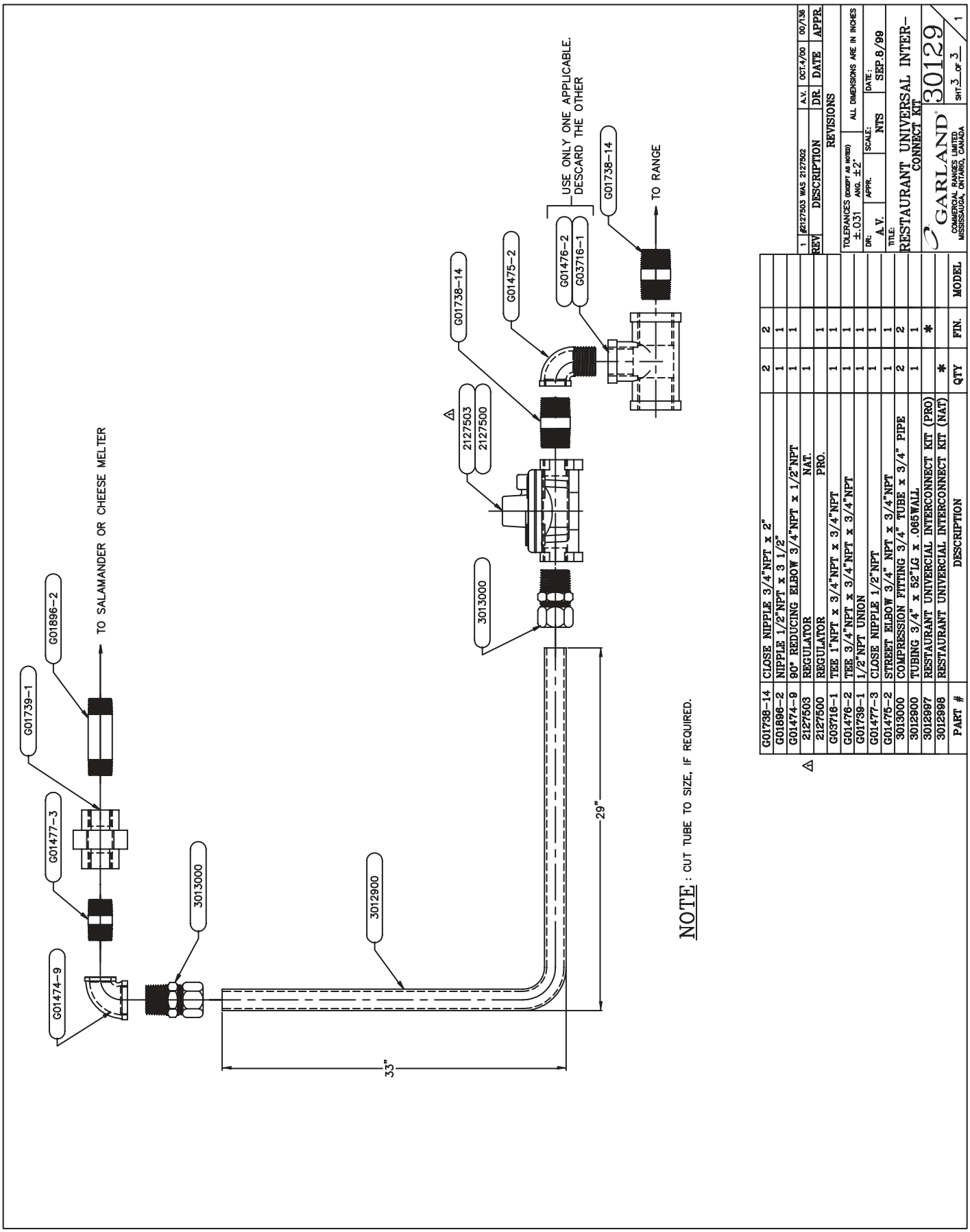

45239 G, U, X, (Sit control) Interconnect kit

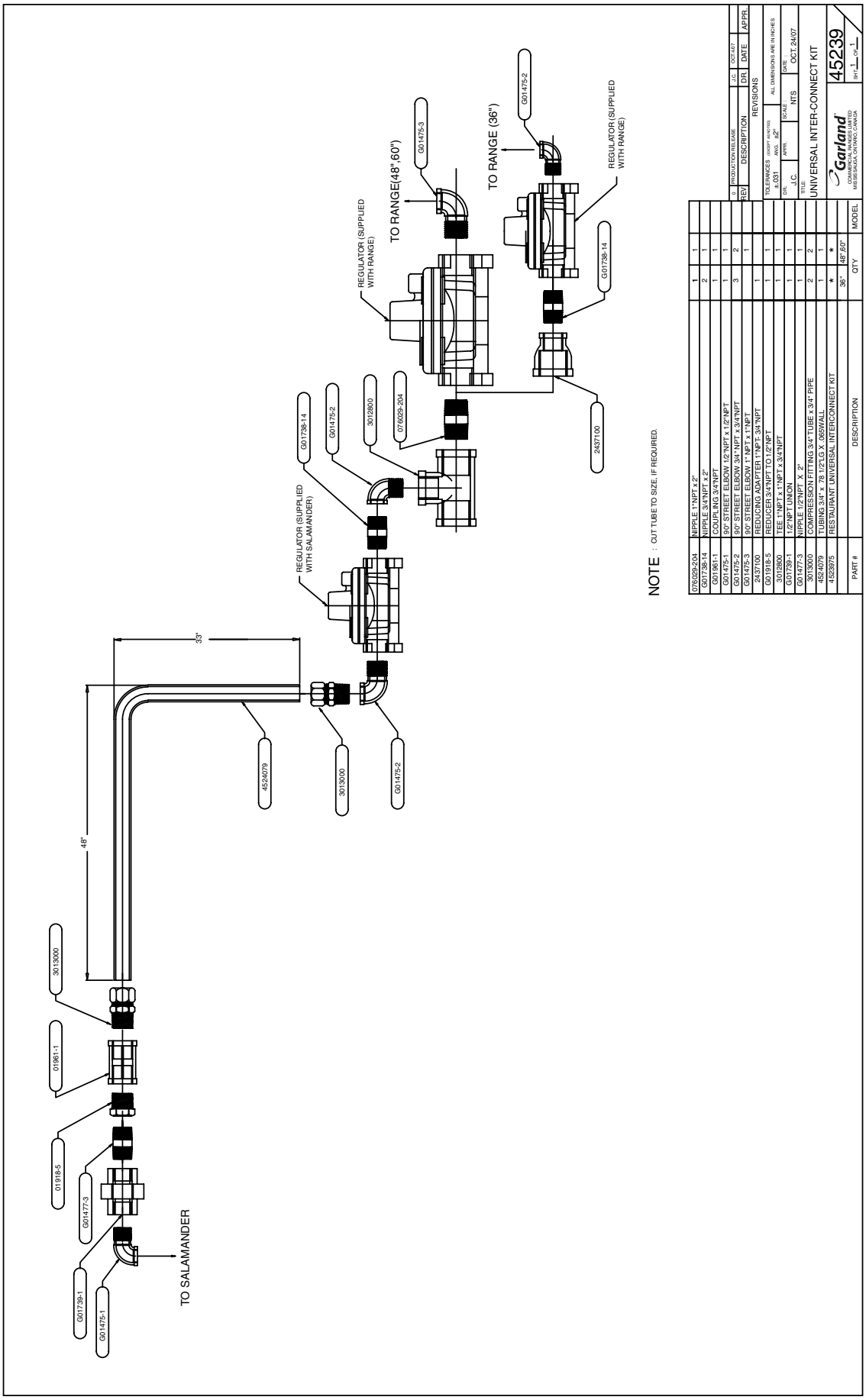

Garland

U.S. Range

Section 15

Service Bulletins

Garland U.S. Range

BULLETIN # B-54-2008-S

From: Parts and Service Department **Date: June 18, 2008**
To: All Authorized Service Agencies

Product: Garland G, U, and X Series Restaurant Range Models
Subject: Sit Valve Introduction

Please find the enclosed introduction to the Sit Valve Modulating/Snap Thermostat used in the Garland G, U, and X Series Restaurant Range Models. These instructions will be added to our existing manuals, and they are designed to inform technicians of some common details and the general overview of the Sit Thermostat.

Please contact The Garland/US Range Parts or Technical Service Department with any questions.

A:US C:Canada B:Canada/US I:International S: Service P: Parts W: Warranty G: General
1-800-427-6668 www.garland-group.com Fax: 1-800-361-7745

Sit Valve Field Guide
G, U, and X Series

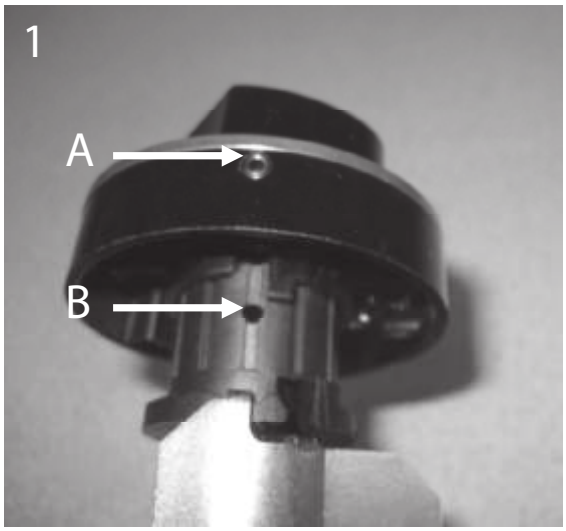

When installing the knob, align the set screw (a) with the hole on the hub (b).

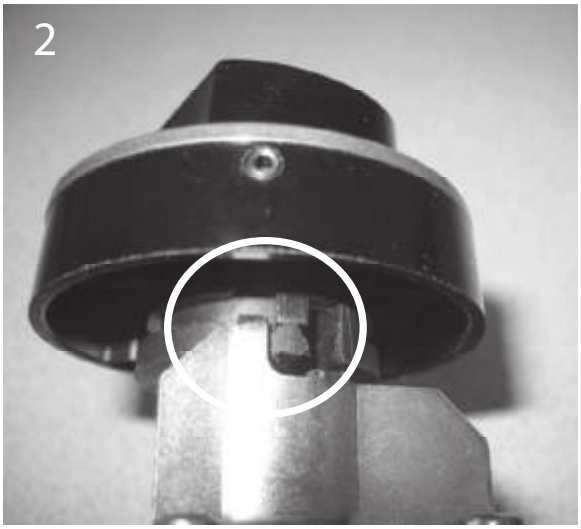

When installed correctly, the knob tab extends the hub stop so the knob cannot be overturned into

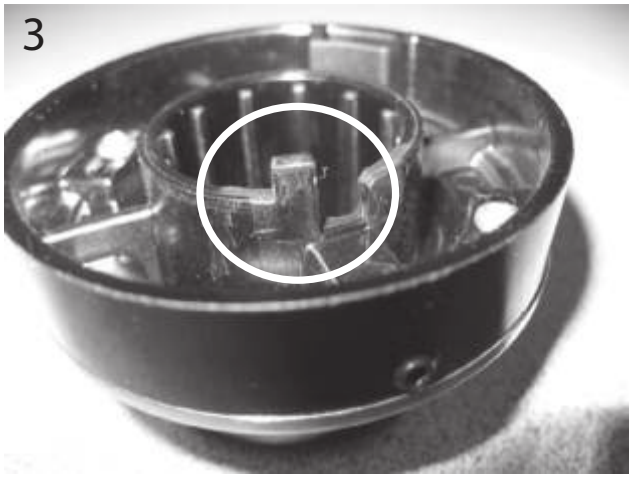

The tab must be intact on the knob for the knob to properly stop as shown in figure 2. If the tab is missing the knob will continue to turn until the pilots are extinguished. If the tab is damaged or missing, replace the knob.

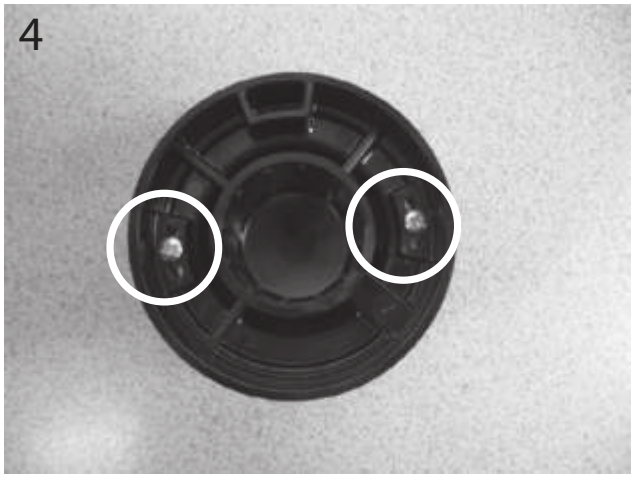

To calibrate the Thermostat, use the two screws on the knob. The factory preset position has the screws centered in the slots. The total range for adjustment is 35 degrees. (17.5 up or down) Please see notes*

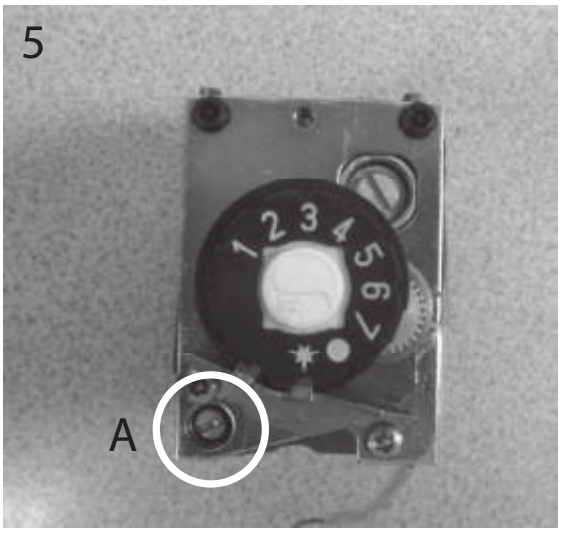

To adjust the pilot size, turn the pilot adjustment screw (A). The pilot flame should be approximately ¾ of an inch long.

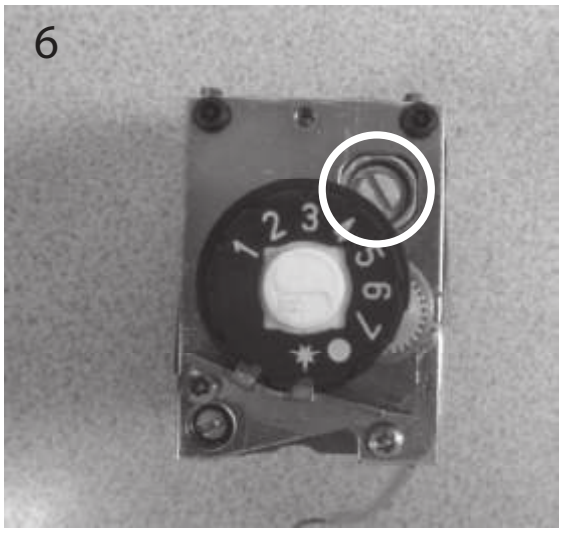

No adjustment should be made to the screw circled above. Please see notes*

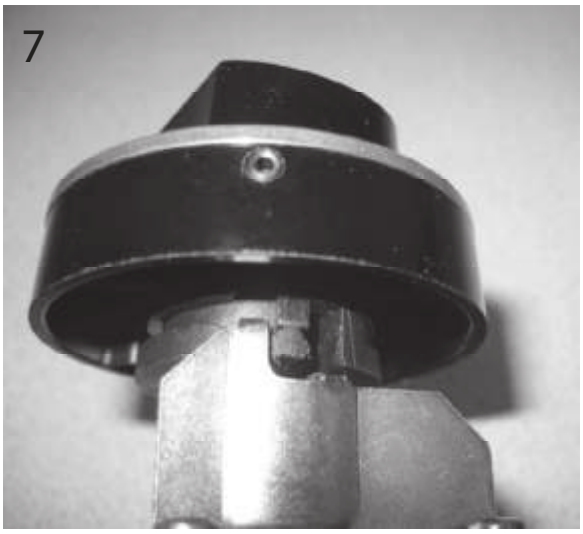

To shut down all gas to pilots and burners, loosen the knob set screw and gently pull knob off and proceed to figure 8.

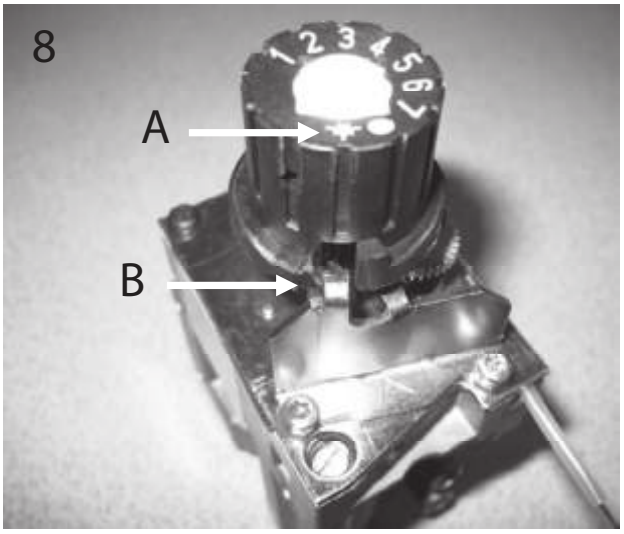

With the knob removed, turn the hub until the metal tab (B) lines up with the * symbol (A). With the hub in the position shown, the gas should be off at the pilots and burners. When ready to relight the pilot, turn the hub to the position shown in figure one and push in to light.

* Notes:

The Sit Thermostat used in the Garland G, U and X series is a Modulating/Snap thermostat with a multifunctional single knob.

The part number for theOven Thermostat is 4523006 (Long Capillary) and the Griddle Thermostat is 4523007(Short Capillary).

Before any calibration is attempted, the thermostat should be set at400°F and be allowed to cycle for a minimum of 30 minutes. After 30 Minutes, if the temperature reading is between 370°And 430°F, the control is functioning correctly and should not be replaced. It can be calibrated however as the needs of the customer dictate. (See Figure 4) If the Control reads lower than 370°F or higher than 430°F after 30 minutes at 400° F the control should be replaced.

DO NOT ADJUST the screw pictured in figure 6. The Main Burner Flame is not adjustable. (There is a fixed orifice in the control)

Garland U.S. Range

BULLETIN # A-50-2009-S

From: Parts and Service Department **Date: April 6, 2009**
To: All US Authorized Service Agencies

Subject: SIT Control Operational Guide
Models Affected: G, GF, U, and X Series Ranges

Due to many questions regarding the operation of the SIT Control, below is a description of the valves operation for review.

The SIT control is a Modulating Snap Combination Safety Valve and Thermostat Control.

The First Stage Screw shown below, is installed by the control manufacturer and should not be adjusted. If you believe it has been tampered with, turn the screw all the way clockwise until tight for the proper setting. **(Do not over tighten)**

A:US C:Canada B:Canada/US I:International S: Service P: Parts W: Warranty G: General
1-800-427-6668 www.garland-group.com Fax: 1-800-361-7745

Garland uses a fixed drilled orifice to regulate the first stage in the SIT Control as shown below.

(Internal component shown, <u>do not disassemble control</u>)

<u>When a call for heat is initiated, the thermostat will cycle as follows:</u>

First stage, as shown below, begins when the thermostat applies light pressure to the base of the valve assembly. The greater the degrees for the thermostat to rise to set point, the higher the pressure will be. When higher pressure is applied to the base of the valve assembly, the second stage begins. The second stage raises the entire valve assembly.

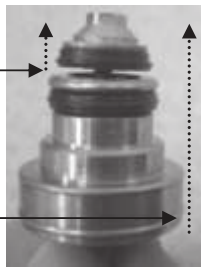

(Internal component shown, <u>do not disassemble control</u>)

As the control approaches set point, the valve assembly lowers, modulating the flame, until it completely closes, leaving the fixed flame of the first stage to continue Until all pressure is removed and valve assembly is fully closed as shown below.

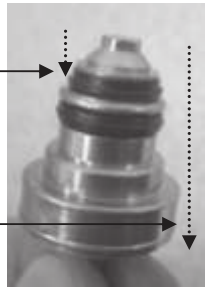

(Internal component shown, <u>do not disassemble control</u>)

So to review, first stage is a fixed flame based on an orifice within the control and second stage is modulating, based on variable valve assembly positioning. Both snap closed when the thermostat satisfies the call for heat by relieving the pressure from the Valve Assembly.

Garland U.S. Range

BULLETIN # B-63-2009-S

From: Parts and Service Department **Date: May 22, 2009**
To: All Authorized Service Agencies

Product: G, U and X Model Ranges
Subject: Tips to Determine Oven/ Griddle Pilot Outage Root Cause

Please be advised we have had instances of pilot outages on our new range line, where the onsite technician has not been able to determine root cause. Enclosed is a list of items to review, to determine intermittent pilot problems.

1. Check the Thermostat knobs. Knobs that have the tabs broken or are mis-aligned on the thermostat bodies will cause pilot outage while trying to adjust temperature values. This will not apply to any Flame-failure type units.

2. Ensure Back Guards and High-Shelves are properly mounted on the rear of the range. Any deviation or leakage on the guard or shelf install could cause the unit to “front-vent” and extinguish the oven/griddle or top section pilot.

3. Ensure dynamic manifold pressures are according to factory specification. Check incoming supply values, and /or any type of supply pressure fluctuation. * NOTE* 48” and 60” models require a 1” regulator to ensure proper manifold pressures are within defined specifications.

4. Check for Ventilation cross drafts, or drafts along the floor. Inconsistent vent pressure or flue blockages can conceivably cause the pilots to “drop out” during normal cycling of the thermostats

5. Ensure pilot and burner orifices are sized correctly to ensure the proper amount of fuel at the pilot and burners to ensure stability of the pilot flame. Check that the pilot orifice is seated properly on the pilot olive sleeve and there are no leaks at the compression fittings or pilot line.

6. Check milli voltage from the thermocouples to ensure the correct amount of milli voltage is present. Refer to your unit’s technical service manual to determine the correct amount of voltage.

7. Check the spring tension on the oven doors to ensure the doors are fully closed when the unit is hot. An open oven door can cause flue gases to collect in behind the front panel a choke off the upper section pilots.

8. Please ensure all tubing ends are free of burrs or tubing debris. Also ensure there has be no reduction of the tubing I.D. where the lines have been cut to fit.

9. Ensure the pilot hood is located correctly. One side of the hood is to feed the burner; the other side is to feed the thermocouple tip. Ensure the tip of the thermocouple is fully engulfed and glows red. These are visual checks that can be verified by the mV readings Also ensure the pilot assembly is enclosed back into its box after servicing.

If these checks are performed accordingly and you are still having intermittent pilot problems, please contact our Technical Support at 800-427-6668 for further instruction and review.

G U X Pilot Assembly Guide
G, U, and X SeriesOven Pilots

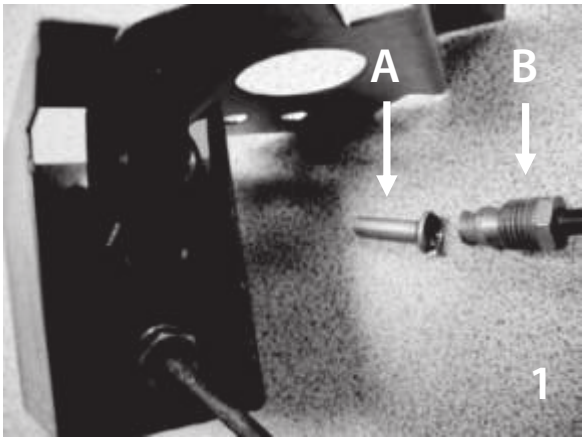

When assembling the Pilot, the pilot orifice (a) interlocks with the grooved ferr ule (b).

When installed incorrectly, the lip prevents the ferrule from seating completely with the orifice. This will have a negative effect on the pilot flame and needs to be corrected.

The orifice and ferrule can be interlocked prior to insertion, to verify they will seat properly within the pilot assembly.

When inserted and tightened, they will seal tightly and the pilot will operate as designed.

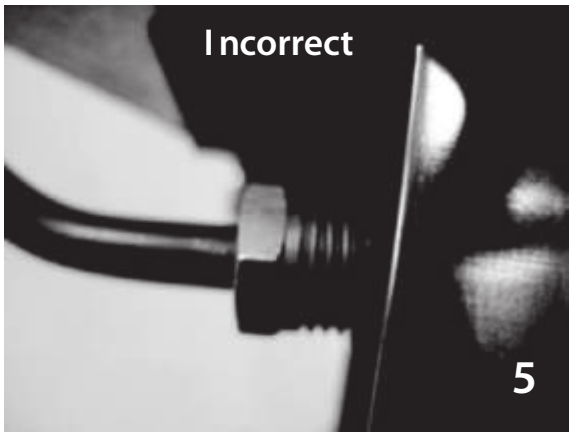

When the pilot is assembled **incorrectly, approximately 4 threads will be shown.**

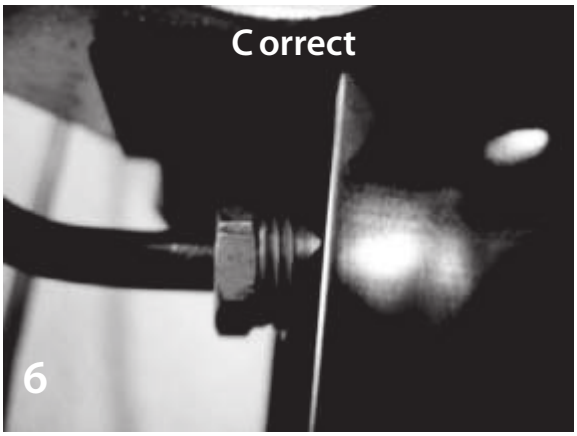

With a pilot assembled correctly approximately 2 threads will be visible.

Garland®

U.S. Range®