JDF®-4S Lit Door

Height: 33.4" (84.8cm) Width: 15.7" (39.9cm) Depth: 28.0" (71.1cm)

- Patented High Intensity Mixing System delivers consistent quality beverages in the cup - cup after cup, from the top of the cup to the bottom of the cup
- 7" (17.8cm) cup clearance accommodates most juice containers
- Both push and hold dispense and optional single size portion control dispense available in the same dispenser
- Quick dispense with 1.0 to 1.5oz (29.6 to 44.4ml) per second flow rate
- One dispenser delivers both frozen and ambient concentrate products to maximize profitability by providing greater flexibility in product offerings
- Door lock standard
- Service friendly design makes set up and maintenance simple
- Burst Capacity: At rate of three 12 oz drink/min, 145 drinks before exceeding 41°F (75°F ambient and 75°F incoming water temp)
- Pumps and Mixes most 2+1 to 11+1 concentrates accurately and consistently, including 4+1 and 5+1 high viscosity concentrates
- LED lighted door graphics bring high visibility to front-of-house applications

Agency:

NSF Intertek

Specifications

Product #: 37300.0004

Flavors: 4 Flavors

Water Access: Plumbed

Finish: Black

Door: Lit

Refrigerant: R-134A

Ice Bank: 18.00 lbs (8.165 kgs)

Dispense: Push Button

Additional Features

Electrical & Capacity

Volts*	Amps	Watts	Cord Attached	Plug Type	8oz cups/hr 236ml cups/hr	Input H²O Temp.	Phase	# Wires plus Ground	Hertz
120	6	720	Yes	NEMA 5-15P	-	60°F (15.5°C)	1	2	60

*When a BUNN is machine rated 120/208-240V, 120/208V or 120/240V, the higher voltage is the supply voltage needed to power the machine. The 120V is there to supply power to some components rated 120V in the machine, but it is not the supply voltage and would not power the machine if the machine is marked with the before mentioned ratings.

Plumbing Requirements

PSI	kPa	Fitting Supplied	Water Flow Required (GPM)
20-100	138-689	3/8" Male Flare Fitting	-

⚠ **WARNING:**

CAD Drawings

2D	Revit	KLC
●		

BUNN® reserves the right to change specifications and product design without notice. Such revisions do not entitle the buyer to corresponding changes, improvements, additions or replacements for previously purchased equipment. For most current specifications and other info visit bunn.com.

Last Updated: 08/15/2024

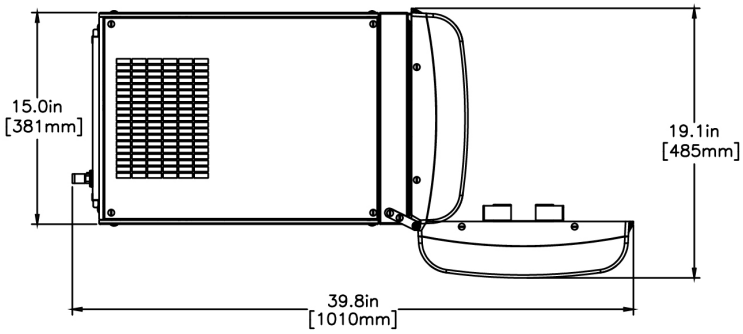

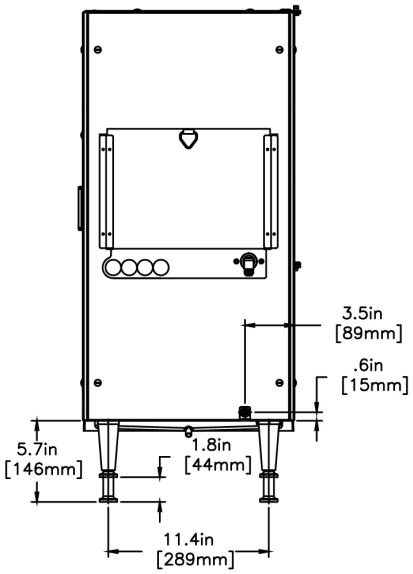

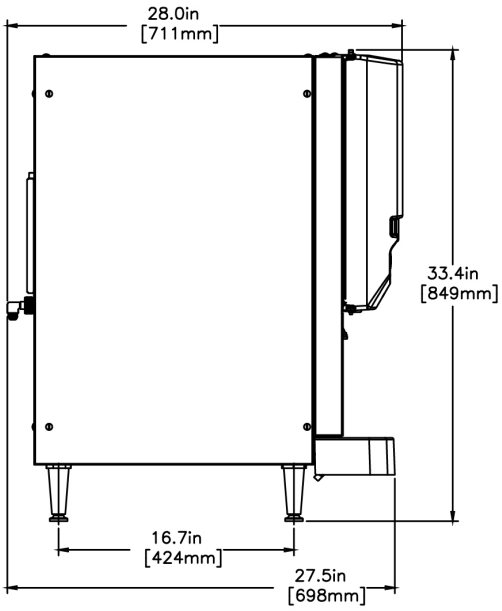

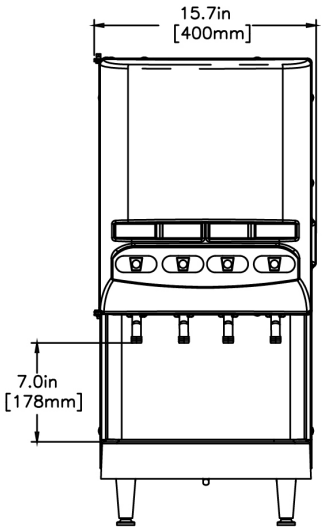

	Unit			Shipping				
	Height	**Width**	**Depth**	**Height**	**Width**	**Depth**	**Weight**	**Volume**
English	33.4 in.	15.7 in.	28.0 in.	43.7 in.	22.8 in.	30.5 in.	145.450 lbs	17.543 ft³
Metric	84.8 cm	39.9 cm	71.1 cm	111.0 cm	57.8 cm	77.5 cm	65.976 kgs	0.497 m³

BUNN® reserves the right to change specifications and product design without notice. Such revisions do not entitle the buyer to corresponding changes, improvements, additions or replacements for previously purchased equipment. For most current specifications and other info visit bunn.com.

Last Updated: 08/15/2024

Related Products & Accessories: JDF®-4S Lit Door(37300.0004)

KIT, AMBIENT CONC CVRSN JDF-4

Product #: 33699.0001

WATER FILTER, EQHP-10

Product #: 39000.0004

CONTAINER ASSY, REFILLABLE

Product #: 39302.0000

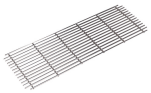

WIRE GRILL, DRIP TRAY (JDF-4S)

Product #: 39613.0000

KIT, HOSE ASSY-PUMP JDF-2S/4S

Product #: 39690.0000

TRAY, EXTENDED DRIP JDF-4S

Product #: 40789.1000

KIT, TST 4 VALVE MECH SWITCH

Product #: 45541.1004

KIT, TST 4 VALVE OVAL OVERLAY

Product #: 45541.1006

SYSTEM, WQ-55(2)5

Product #: 56000.0004

SYSTEM, WEQ-10(1.5)5

Product #: 56000.0027

CARTRIDGE, WQ-55(2)5

Product #: 56000.0104

CARTRIDGE, WEQ-10 (1.5)5

Product #: 56000.0122

BUNN® reserves the right to change specifications and product design without notice. Such revisions do not entitle the buyer to corresponding changes, improvements, additions or replacements for previously purchased equipment. For most current specifications and other info visit bunn.com.

Serving & Holding Options: JDF®-4S Lit Door(37300.0004)

Serving and Holding selections are currently unavailable. Please contact your sales representative to find out more information.

BUNN® reserves the right to change specifications and product design without notice. Such revisions do not entitle the buyer to corresponding changes, improvements, additions or replacements for previously purchased equipment. For most current specifications and other info visit bunn.com.