INSTALLATION MANUAL

TRCB

THANK YOU

FOR YOUR PURCHASE

Safety Information
Safety Precautions & Proper Disposal.....3
Cabinet Dsiposal Warning.....3

Prior to Installation
Ownership 4
Cabinet Specification.....4
Cabinet Location 4
Notice to Customer 4
Clearances.....4
Wire Gauge Chart.....5
Wire Advisement 5

Installation
Uncrating.....6
Cabinet Location 7
Leveling Legs & Castors 7
Leveling.....8
Sealing the Cabinet to the Floor.....8
Electrical Safety.....9

Cabinet Setup
Drawer Removal and Installation.....10

Cabinet Operation
Startup.....12
Temperature Control Location 12
Sequence of Operation.....13

Maintenance, Care, and Cleaning
Condenser Coil Cleaning.....14
Stainless Steel Care & Cleaning.....16

Cabinet Adjustments, Servicing & Component Replacement
Sevicing & Replacing Components 17

How to Maintain Your True Refrigerator to Receive the Most Efficient and Successful Operation

You have selected one of the finest commercial refrigeration units made. It is manufactured under strict quality controls with only the best quality materials available. Your TRUE cooler, when properly maintained, will give you many years of trouble-free service.

WARNING – Use this appliance for its intended purpose as described in this Installation Manual.

- Take care during operation, maintenance or repairs to avoid cuts or pinching from any part/component of the cabinet.
- Units may pose a tipping hazard while uncrating, during installation, or when moving the unit.
- Ensure the unit is properly installed and located in accordance with the Installation Instructions before use.
- This appliance is not to be used, cleaned or maintained by persons (including children) with reduced physical, sensory or mental capabilities or lack of experience and knowledge, unless they have been given supervision or instruction.
- **DO NOT** allow children to play with the appliance or climb, stand, or hang on the unit's shelves to prevent damage to the refrigerator and personal injury.
- **DO NOT** touch the cold surfaces in the freezer compartment when hands are damp or wet. Skin may stick to these extremely cold surfaces.
- Unplug the refrigerator before cleaning and making repairs.
- Setting temperature controls to the 0 position or powering off an electronic control may not remove power from all components (e.g., light circuits, perimeter heaters, and evaporator fans).
- **DO NOT**

Prior to Installation

Ownership

To ensure that your unit works properly from the first day, it must be installed properly. We highly recommend a trained refrigeration mechanic and electrician install your TRUE equipment. The cost of a professional installation is money well spent.

Before you start to install your TRUE unit, carefully inspect it for freight damage. If damage is discovered, immediately file a claim with the delivery freight carrier.

TRUE is not responsible for damage incurred during shipment.

Cabinet Specification

This appliance is rated for the storage and/or display of prepackaged or bottled food product.

Cabinet Location

- Appliance tested for IEC to ISO Climate Class 5 [104°F (40°C) temperature, 40% relative humidity].
- For proper operation, ambient temperatures shall not be less than 60°F (15.5°C) and no greater than 104°F (40°C).
- Appliance is not suitable for outdoor use.
- Appliance is not suitable for an area where a pressure washer or hose may be used.
- Ensure the location will provide adequate clearances and sufficient airflow for the cabinet.
- Ensure the power supply for the cabinet matches the cabinet specification sheet or cabinet data plate and is within the rated voltage (+/-5%). Also, that the amp rating of the circuit is correct and that it is properly grounded.
- The cabinet should always be plugged into its own individual dedicated electrical circuit. The use of adapter plugs and extension cords is prohibited.

Cooking Equipment Weight Limits

Chef Base cabinet tops are designed to support countertop cooking equipment. See cooking equipment weight limits in the table below.

- Install countertop cooking equipment with their manufacturer-supplied legs.
- Minimum 4" (101.6 mm) clearance between TRCB's top and the bottoms of cooking equipment heating elements. Failure to provide clearance voids manufacturer warranty.
- For optimum performance, TRUE recommends installing a heat shield (not supplied by TRUE).

115 Volts	Distance In Feet To Center of Load											
AMPS	20'	30'	40'	50'	60'	70'	80'	90'	100'	120'	140'	160'
2	14	14	14	14	14	14	14	14	14	14	14	14
3	14	14	14	14	14	14	14	14	14	14	14	12
4	14	14	14	14	14	14	14	14	14	12	12	12
5	14	14	14	14	14	14	14	12	12	12	10	10
6	14	14	14	14	14	14	12	12	12	10	10	10
7	14	14	14	14	14	12	12	12	10	10	10	8
8	14	14	14	14	12	12	12	10	10	10	8	8
9	14	14	14	12	12	12	10	10	10	8	8	8
10	14	14	14	12	12	10	10	10	10	8	8	8
12	14	14	12	12	10	10	10	8	8	8	8	6
14	14	14	12	10	10	10	8	8	8	6	6	6
16	14	12	12	10	10	8	8	8	8	6	6	6
18	14	12	10	10	8	8	8	8	8	8	8	5

Installation

Uncrating

Required Tools

Required tools include (but may not be limited to) the following:

- 9/16 Socket Wrench
- Phillips screwdriver
- Level

Procedure

1. Remove the outer packaging (cardboard and bubble wrap or Styrofoam corner and clear plastic). See fig. 1.
2. Inspect the unit for concealed damage.
3. Remove the wooden skid. Set the skid aside.

   NOTE: Move the unit as close as possible to the final location before removing the wooden skid.

   a. Position packing material behind the appliance to protect the appliance.

   b.

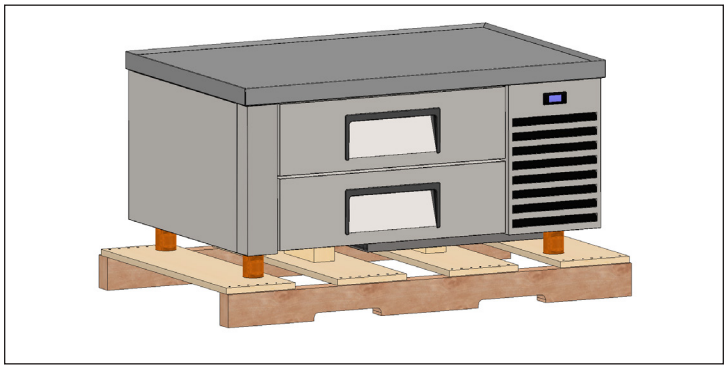

Fig. 1. Remove the exterior packaging.

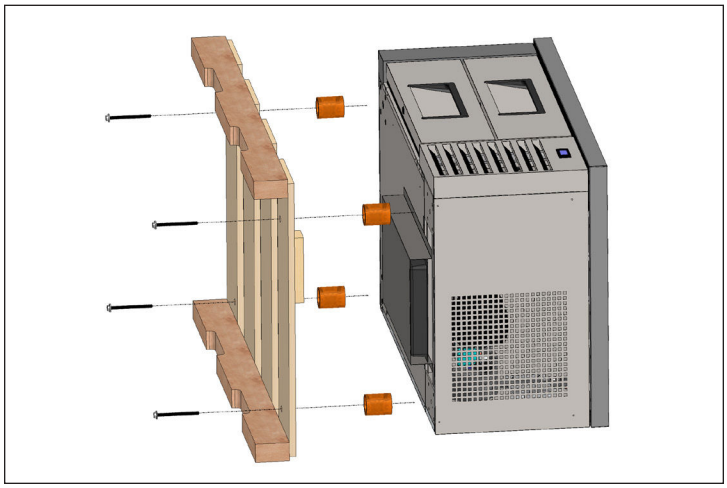

Fig. 2. Remove the shipping bolts.

Installation (cont.)

Cabinet Location

1. Ensure that the drain hose or hoses are positioned in the pan.
2. Free the plug and cord from inside the lower rear of the cooler (DO NOT plug in).
3. Place the unit close enough to the electrical supply so that the extension cords are never used.

6" Leveling Leg & Castor Installation

Leveling legs are provided to assist with leveling the cabinet. Adjustable legs will provide 6" (152 mm) of clearance under the cabinet. Castors provide cabinet mobility.

NOTE: If the cabinet has a center leveling screw, castor, or leg, make sure it is adjusted properly so it makes full contact with the floor after the cabinet has been leveled.

Required Tools

Required tools include (but may not be limited to) the following:

- 9/16 Socket Wrench

6” Leveling Leg Installation

1. Access the unit’s bottom.
2. Locate the mounting plate anchor points on the unit’s bottom.
3. Install the mounting plate. See fig. 1.
4. Thread the leveling legs into the mounting plate. See fig. 1.
5.

Installation (cont.)

Sealing the Cabinet to the Floor

Asphalt floors are susceptible to chemical attack. A layer of tape may be placed on the floor prior to applying the sealant to protect the floor.

Procedure

1. Position the cabinet, allowing 3" (73 mm) between the wall

Leveling

Proper leveling of your TRUE cooler is critical to operating success (for non-mobile models). Leveling impacts effective condensate removal and door operation.

Procedure

Level the unit front-to-back and side-to-side.

1. Position the level on the inside floor of the unit near the doors (the level should be parallel to cabinet front). Level the cabinet.
2. Position the level at the inside rear of cabinet (again, the level should be placed parallel to cabinet back). Level the cabinet.
3. Perform procedures similar to steps 1 and 2 by placing the level on inside floor (left and right side, parallel to the depth of the cooler). Level the cabinet.

NOTE: If the cabinet has a center leveling screw, castor, or leg, make sure it is adjusted properly so it makes full contact with the floor after the cabinet has been leveled.

Installation (cont.)

How to Connect Electricity

- The power cord from this appliance is equipped with a grounding plug which minimizes the possibility of electric shock hazard.
- The wall outlet and circuit should be checked by a licensed electrician to make sure the outlet is properly grounded.
- If the outlet is a standard 2-prong outlet, it is your personal responsibility and obligation to have it replaced with the properly grounded wall outlet.
- **DO NOT**, under any circumstances, cut or remove the ground prong from the power cord. For personal safety, this appliance must be properly grounded.
- Before your new unit is connected to a power supply, check the incoming voltage with a voltmeter. If the recorded voltage is less than the rated voltage for operation (+/-5%) and amp rating, correct immediately. Refer to cabinet data plate for this voltage requirement.
- The refrigerator/freezer should always be plugged into a dedicated electrical circuit. This provides the best performance and prevents building wiring circuits from being overloaded, which could cause a fire hazard from overheated wires.
- Never unplug your refrigerator/freezer by pulling on the power cord. Always grip plug firmly and pull straight out from the outlet.
- When moving the refrigerator/freezer, for any reason, be careful not to roll over or damage the power cord.
- Repair or replace immediately all power cords that have become frayed or otherwise damaged. **DO NOT** use a power cord that shows cracks or abrasion damage along its length or at either end.
- If the supply power cord is damaged, it should be replaced with
-

Cabinet Setup

Drawer Removal and Installation #1

Removal

1. Completely open the drawer.
2. Locate the roller clips (in down position; see figs. 1 and 2).
3. While holding the sides of the drawer, rotate the roller clips upward. See fig. 3.
4. Lift the drawer from the channel slot.

Installation

1. With the roller clips in the up position (see fig. 3), lower the drawer's rear rollers into the channel slots.
2. Push the drawer into position.
3. Rotate the roller clips to the down position. See figs. 1 and 2.

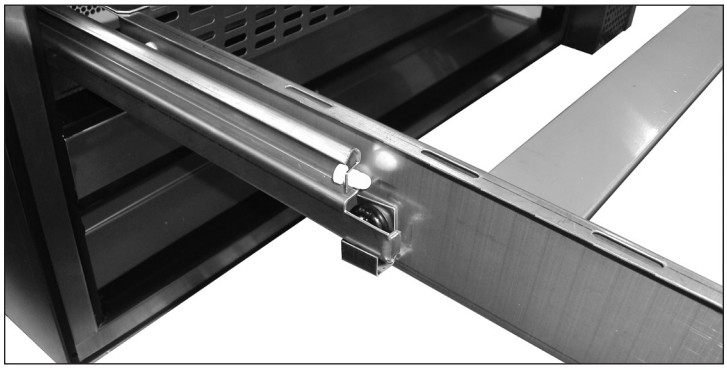

Fig. 1. Roller clip location.

Fig. 2. Roller clip in down position.

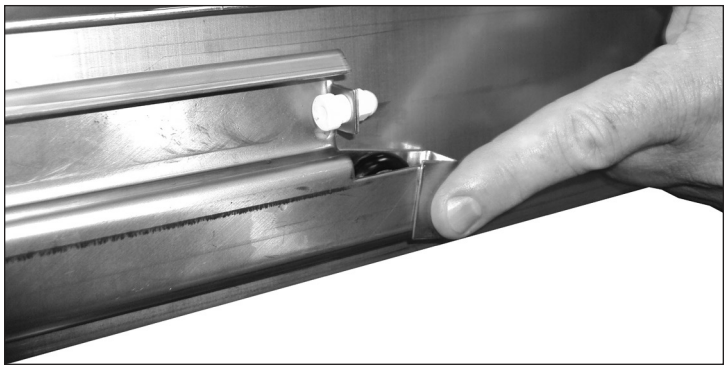

Fig. 3. Rotate the roller clip upward.

Fig. 4. Carefully lift the drawer from the channel slots.

Cabinet Setup

Drawer Removal and Installation #2

Removal

1. Slide the drawer out and locate the plastic drawer retainer. See fig. 1.
2. Push the plastic drawer retainer forward and raise the front end. See figs. 2a and 2b.
3. Remove the drawer.

Installation

1. With the plastic drawer retainer raised, align the drawer with the slide and push the drawer into position. See figs. 2b and 3.
2. Align the drawer with the drawer slide and push the drawer into position.
3. Press the plastic drawer retainer down and towards the back of the cabinet. See fig. 1.
4. Verify correct drawer operation.

Fig. 1. Drawer retainer location. Retainer is engaged.

Fig. 2a. Push the retainer forward.

Fig. 2b. Push the back of the retainer down.

Fig. 3.

Cabinet Operation

Startup

- The compressor is ready to operate when the unit is purchased. All you need to do is plug in the cooler.
- Excessive tampering with the control could lead to service difficulties. If replacing the temperature control is ever needed, be sure to order the replacement from your TRUE dealer or recommended service agent.
- Good air flow inside your TRUE unit is critical. Take care to prevent product from pressing against the sides or back wall and coming within 4" (101.6 mm) of the evaporator housing. Refrigerated air off the evaporator coil must circulate throughout the cabinet for even product temperatures.

NOTE: If the unit is disconnected or shut off, wait 5 minutes before restarting.

RECOMMENDATION – Before loading product, run your TRUE unit empty for 24 hours to verify proper operation. Remember, our factory warranty **DOES NOT** cover product loss!

Electronic Temperature Control, with Digital Display

Cabinet Operation (cont.)

General Sequence of Operation — Refrigerator and Freezer Cabinets

When the cabinet is plugged in...

- Interior lights will illuminate on glass door models (see previous page for light switch location).
- An electronic control with digital display will illuminate (if installed).
- There may be a short delay before the compressor and/or evaporator fan(s) start. This delay may be determined by time or by temperature, which could be the result of an initial defrost event that will last at least 6 minutes.
- The temperature control/thermostat may cycle the compressor and evaporator fan(s) on and off together. Every cabinet will require a defrost event to ensure the evaporator coil remains clear of frost and ice buildup. Defrost is initiated by a defrost timer or by the electronic control.

  EXCEPTION – Models TSID, TDBD, TCGG, and TMW do not have an evaporator fan(s).
- The temperature control/thermostat senses either an evaporator coil temperature or air temperature, NOT product temperature.
- An analog thermometer, digital thermometer, or electronic control display may reflect the refrigeration cycle swings of up and down temperatures, NOT product temperature. **The most accurate method to determine a cabinet's operation is to verify the product temperature.**
- Refrigerators with mechanical temperature controls will defrost during every compressor off-cycle.
- Freezers with mechanical temperature controls will defrost by time initiation as determined by a defrost timer.

  EXCEPTION

Important Warranty Information

THE CLEANING OF THE CONDENSER IS NOT COVERED BY WARRANTY!

If you have any questions, please contact your local TRUE Manufacturing Service Department. See the front cover for locations and contact information.

- Condenser coils accumulate dirt and require cleaning every 30 days or as needed.
- A dirty condenser coil can result in non-warranted repairs and/or cabinet failure.
- Proper cleaning involves removing dust from the condenser by using a soft brush, vacuuming the condenser with a shop vac, or using CO_2, nitrogen or pressurized air.
- Do not place any filter material in front of the condensing coil.
- On most units, the condenser is accessible by removing the cabinet's outer grill cover.
- If you cannot remove the dirt adequately, please contact your licensed refrigeration service provider.

Maintenance, Care & Cleaning (cont.)

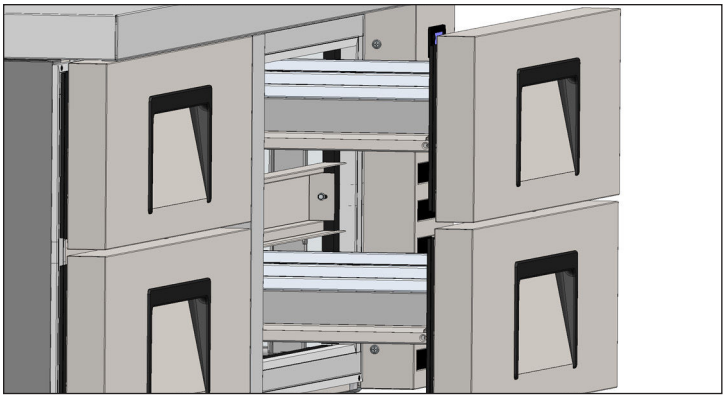

Fig. 1.

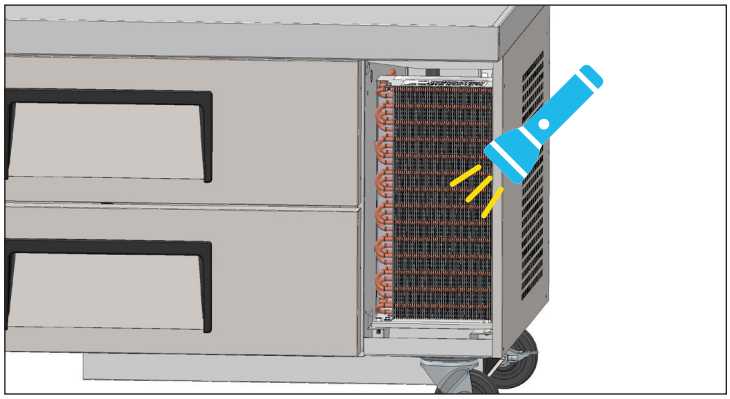

Fig. 3. Verify all blockages have been removed.

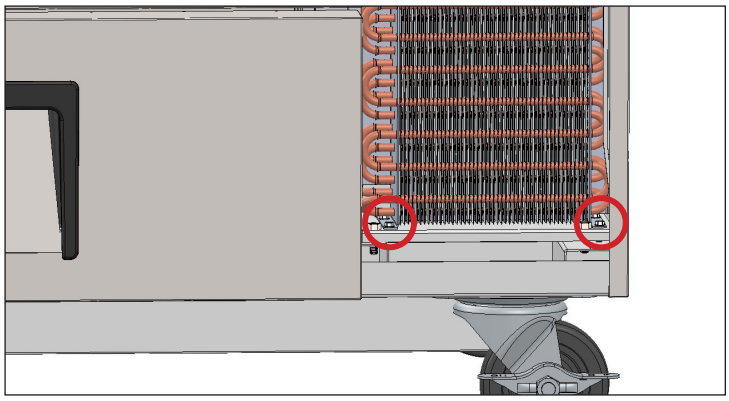

Fig. 4. Condenser base bolt locations.

Maintenance, Care & Cleaning (cont.)

Stainless Steel Care & Cleaning

CAUTION – **DO NOT** use any steel wool, abrasive or chlorine-based products to clean stainless steel surfaces.

Stainless Steel Opponents

There are three basic things which can break down your stainless steel's passivity layer and allow corrosion to form.

- Scratches from wire brushes, scrapers, steel pads, and other items that can be abrasive to stainless steel's surface.
- Deposits left on your stainless steel can leave spots. You may have hard or soft water depending on what part of the country you live in. Hard water can leave spots. Hard water that is heated can leave deposits if left to sit too long. These deposits can cause the passive layer to break down and rust your stainless steel. All deposits left from food prep or service should be removed as soon as possible.
- Chlorides which are present in table salt, food and water, as well as in household and industrial cleaners. These are the worst type of chlorides to use on stainless steel.

Stainless Steel Cleaning and Restoration

DO NOT use stainless steel cleaners or similar solvents to clean plastic or powder-coated parts. Instead, use warm soapy water.

- For routine cleaning and removal of grease and oil, apply white vinegar, ammonia, or any good commercial detergent* with a soft cloth or sponge.
- Stainless steel polish (e.g., Zep® Stainless Steel Polish, Weiman® Stainless Steel Cleaner & Polish, Nyco® Stainless Steel Cleaner & Polish, or Ecolab® Ecoshine®) and olive oil can act as a barrier against fingerprints and smears.
-

Cabinet Adjustments, Servicing, & Component Replacement

NOTE: Any cabinet adjustments are to be made **AFTER** the cabinet has been verified level and properly supported.

Servicing & Replacing Components

- Replace component parts with original equipment manufacturer (OEM) components.
- Have a licensed service provider service your unit to minimize the risk of possible ignition due to incorrect parts or improper service and to ensure the operator's health and safety.
- Unplug the refrigerator/freezer before cleaning or making any repairs. Setting temperature controls to the 0 position or powering off an electronic control may not remove power from all components (e.g., light circuits, perimeter heaters, and evaporator fans).

FOR MORE INFORMATION

For additional maintenance instruction, please visit the media center at

www.truemfg.com

USA FOODSERVICE & CANADA WARRANTY STATEMENT

FIVE-YEAR HYDROCARBON PARTS & LABOR WARRANTY & THREE YEARS HFC PARTS & LABOR WARRANTY

TRUE warrants to the original purchaser of every new TRUE refrigerated unit, the cabinet, and all parts thereof, to be free from defects in material or workmanship, under normal and proper use and maintenance service as specified by TRUE and upon proper installation and start-up in accordance with the instruction packet supplied with each TRUE unit. TRUE's obligation under this warranty is limited to a period of five (5) years for hydrocarbon (HC) units and three (3) years for HFC units from the date of the original installation. Any warranty coverage is dependent on the purchase date of the cabinet being within 39 months of the original ship date from TRUE.

Any part covered under this warranty that is determined by TRUE to have been defective within this time frame, is limited to the repair or replacement, including labor charges, of defective parts or assemblies. The labor warranty shall include standard straight time labor charges only and reasonable travel time, as determined by TRUE.

Warranty does not cover standard wear parts which include door gaskets, incandescent bulbs, or fluorescent bulbs. Warranty also does not cover issues caused by improper installation or lack of basic preventative maintenance, which includes regular cleaning of condenser coils.

ADDITIONAL TWO-YEAR HYDROCARBON COMPRESSOR WARRANTY

In addition to the five (5) year warranty stated above, TRUE warrants its hermetically and semi-hermetically sealed Hydrocarbon (HC) compressor to be free from defects in both material and workmanship under normal and proper use and maintenance service for a period of two (2) additional years, part only for compressor defects only. Our HFC compressors will have the three (3) years parts & labor detailed above and an additional two (2) years for a compressor part only for compressor defects warranty.

Compressors determined by TRUE to have been defective within this time period will, at TRUE's option, be either repaired or replaced with a compressor or compressor parts of similar design and capacity.

This warranty only applies to units shipped from True's manufacturing facilities after November 1, 2021 for US Foodservice & Canada.

NOTES

www.truemfg.com

EA & BC_190215_08.2022