ULTRA NX, 120V BLK/SST

Height: 32.4" (82.3cm) Width: 16.6" (42.2cm) Depth: 26.4" (67.1cm)

- Patented beverage monitoring technology and reversing auger design ensure consistent, great tasting frozen beverages
- Enhanced auger drive system and seal design for long-lasting, reliable performance
- New leak capture feature helps reduce service costs and clean-up time
- BUNNlink compatible
- Two large product hoppers hold 3 gallons (11.4L) each to maximize serving capacity
- User interface communicates need for cleaning and maintenance
- LED lighted merchandisers in hopper lids bring high visibility to front- of-house applications
- Low-product alert to minimize product outages
- Quick defrost feature to ensure beverage quality and maximize uptime
- Slide in hopper graphics allow quick and easy changes
- USB for easy software updates and downloads
- Optional faucet available for dispensing chilled (non-frozen) products
- Sanitation listings NSF 18 and NSF 6 (Dairy)
- R290 all-natural refrigerant provides a sustainable platform with extremely low Global Warming Potential

Agency:

NSF Intertek

Specifications

Product #: 58000.0015

Autofill: None

Flavors: 2 Flavors

Finish: Stainless/Black

Hoppers: Two

Refrigerant: R290

Dispense: Pull & Hold

Handle: Extended Handle

Additional Features

Electrical & Capacity

Volts*	Amps	Watts	Cord Attached	Plug Type	8oz cups/hr 236ml cups/hr	Input H²O Temp.	Phase	# Wires plus Ground	Hertz
120	12	1440	Yes	NEMA 5-15P	-	60°F (15.5°C)	1	2	60

*When a BUNN is machine rated 120/208-240V, 120/208V or 120/240V, the higher voltage is the supply voltage needed to power the machine. The 120V is there to supply power to some components rated 120V in the machine, but it is not the supply voltage and would not power the machine if the machine is marked with the before mentioned ratings.

Plumbing Requirements

PSI	kPa	Fitting Supplied	Water Flow Required (GPM)
-	-	-	-

⚠ **WARNING:**

CAD Drawings

2D	Revit	KLC
●		

BUNN® reserves the right to change specifications and product design without notice. Such revisions do not entitle the buyer to corresponding changes, improvements, additions or replacements for previously purchased equipment. For most current specifications and other info visit bunn.com.

Last Updated: 05/09/2023

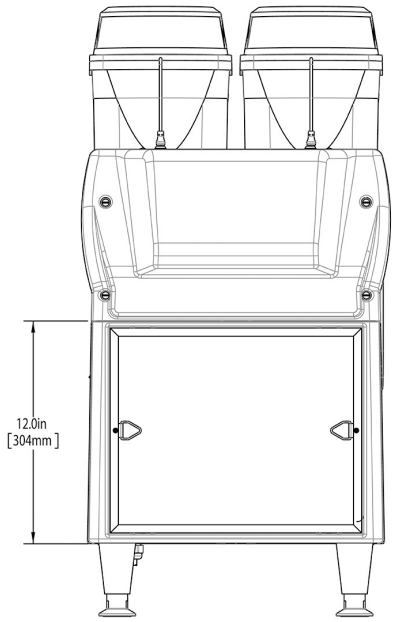

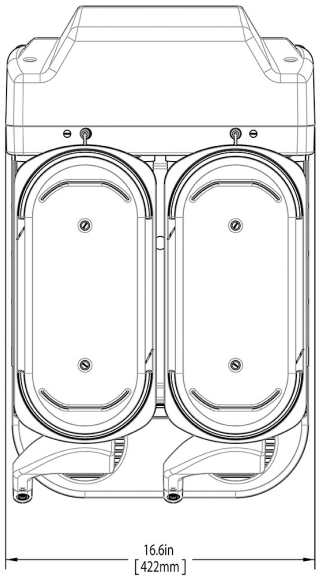

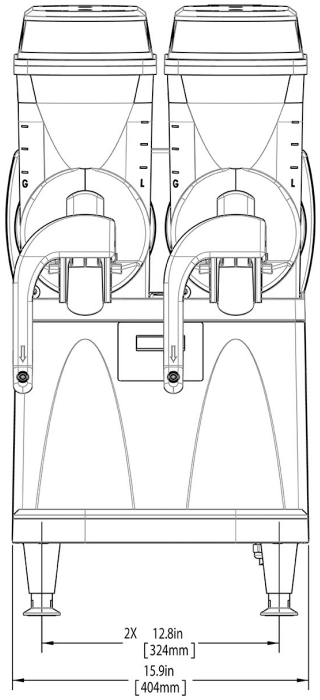

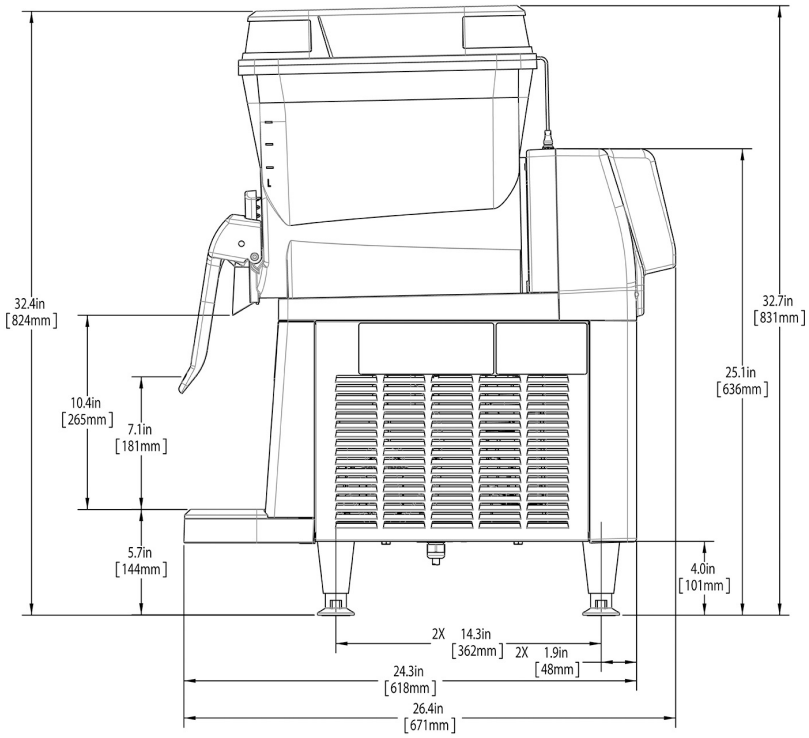

	Unit			Shipping				
	Height	**Width**	**Depth**	**Height**	**Width**	**Depth**	**Weight**	**Volume**
English	32.4 in.	16.6 in.	26.4 in.	43.9 in.	20.5 in.	25.9 in.	121.510 lbs	13.468 ft³
Metric	82.3 cm	42.2 cm	67.1 cm	111.4 cm	52.1 cm	65.7 cm	55.117 kgs	0.381 m³

BUNN® reserves the right to change specifications and product design without notice. Such revisions do not entitle the buyer to corresponding changes, improvements, additions or replacements for previously purchased equipment. For most current specifications and other info visit bunn.com.

Last Updated: 05/09/2023

Related Products & Accessories: ULTRA NX, 120V BLK/SST(58000.0015)

FILTER, AIR 13.562 X 11.062 MAGNETIC

Product #: 28122.0002

HANDLE, FAUCET ULTRA BLK NYLON AM

Product #: 32265.0003

KIT, FAUCET SEALS - ULTRA-2 SEALS

Product #: 32268.1000

KIT, HDL LOCK ULTRA-2

Product #: 34996.0004

KIT, LID LOCK ULTRA NX BLACK

Product #: 34996.0010

KIT, LID & HDL LOCK ULTRA NX BLK

Product #: 34996.0012

KIT, LID LOCK ULTRA-2 SST CLR W/ NX LID

Product #: 34996.0013

KIT,LID & HDL LOCK ULTRA-2 SST CLR W/ NX

Product #: 34996.0014

HANDLE, EXTENDED ULTRA NX BLK NYLON AM

Product #: 44614.0004

DRIP TRAY ASSY, BASE ULTRA NX - BLK

Product #: 57659.1001

DRIP TRAY COVER, ULTRA NX - BLK

Product #: 57660.0001

VALVE, FAUCET LIQUID BLACK ULTRA NX

Product #: 57793.0001

BUNN® reserves the right to change specifications and product design without notice. Such revisions do not entitle the buyer to corresponding changes, improvements, additions or replacements for previously purchased equipment. For most current specifications and other info visit bunn.com.

Serving & Holding Options: ULTRA NX, 120V BLK/SST(58000.0015)

Serving and Holding selections are currently unavailable. Please contact your sales representative to find out more information.

BUNN® reserves the right to change specifications and product design without notice. Such revisions do not entitle the buyer to corresponding changes, improvements, additions or replacements for previously purchased equipment. For most current specifications and other info visit bunn.com.