Project_____

AIA # _____ SIS # _____

Item #_____ Quantity _____C.S.I. Section 114000

CORE SERIES VCRG-M

Manual Restaurant Gas Griddle



Model VCRG36-M

MODELS

- ❑ **VCRG24-M** 24" W x 24" D griddle plate
- ❑ **VCRG36-M** 36" W x 24" D griddle plate
- ❑ **VCRG48-M** 48" W x 24" D griddle plate

STANDARD FEATURES

- 1" thick polished steel griddle plate welded to 3¼" stainless steel back, tapered side splashes and stainless steel grease trough
- Fully welded stainless and aluminized steel chassis frame
- 12½" cooking height on 4" adjustable legs
- One 25,000 BTU/hr. "U" shaped aluminized steel burner for every 12" of griddle width
- One infinite heat control valve per burner
- Standing pilot ignition system
- High capacity 4½ quart capacity grease can
- ¾" rear gas connection and convertible gas pressure regulator for LP service
- Constructed standard for natural gas service
- LP conversion kit supplied with unit
- One year limited parts and labor warranty

SPECIFIER STATEMENT

Low profile Vulcan Core Series Manual Restaurant Gas Griddle Model No._____. Stainless steel front, sides, and front top ledge with a fully welded stainless steel and aluminized steel body frame. 12½" cooking height on 4" legs. Features a 1" thick polished steel griddle plate welded to a stainless steel back and tapered side splashes. Equipped with one 25,000 BTU/hr U-shaped aluminized steel burner and one infinite heat control for each 12" section of griddle width. Includes a 4½-quart capacity grease can, a ¾" rear gas connection, and a convertible gas pressure regulator for LP service.

Exterior Dimensions:
_____" W x 30.5" D x 16" H on 4" legs.

NOTE: Models are constructed standard for natural gas service. Propane conversion kit is supplied with the unit. Conversion is the customer's responsibility. Please indicate propane or natural gas when processing your order.

NOTE: Elevation orifice kit is available free of charge for high-elevation applications. Installation is the customer's responsibility. Please indicate elevation when processing your order.

CSA design certified. NSF listed.

CORE SERIES VCRG-M– Manual Restaurant Gas Griddle

Approved by_____ Date_____ Approved by_____ Date_____

CORE SERIES - VCRG-M

Manual Restaurant Gas Griddle

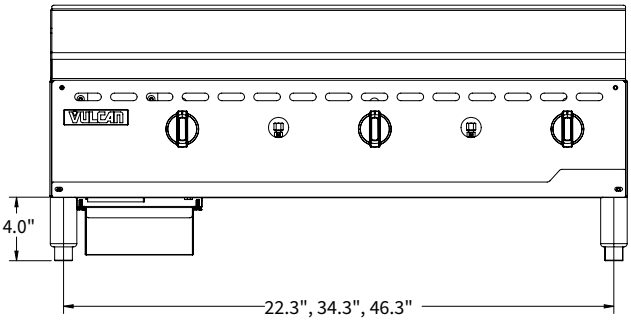

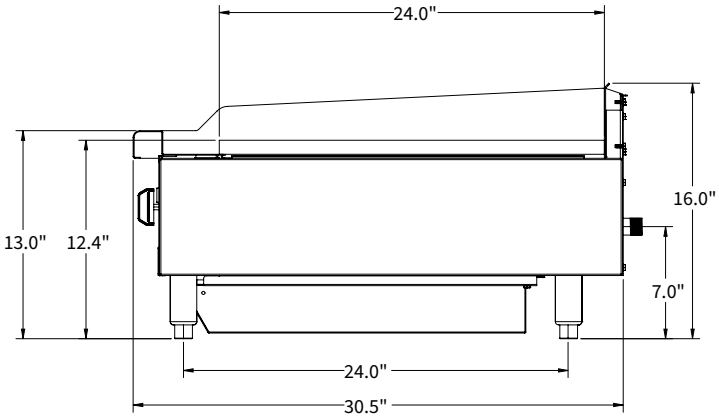

Gas Pressure

A gas pressure regulator supplied with the unit must be installed.
Natural Gas: 4.0" (102mm) W.C.
Propane Gas: 10.0" (254 mm) W.C.

All models must be installed with minimum 4" legs.

Specify type of gas when ordering.
Specify altitude when above 2,000 feet.

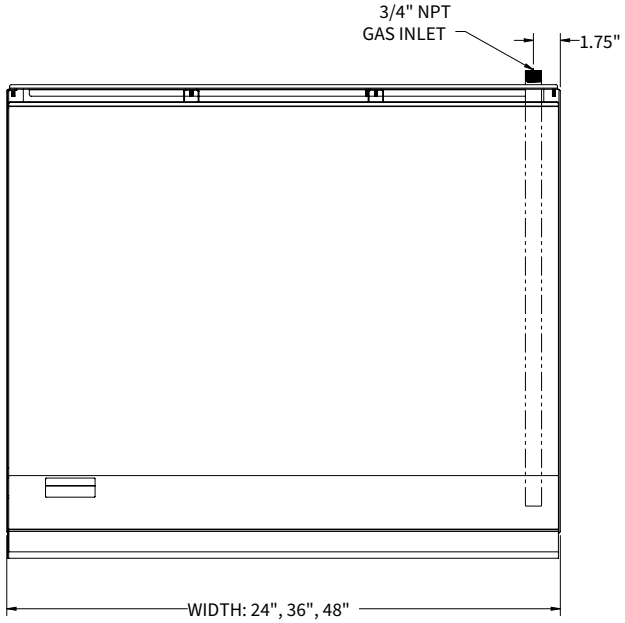

Clearances	Combustible	Non-Combustible
Rear	6"	0"
Right Side	6"	0"
Left Side	6"	0"
Bottom	4"	4"

Model	Unit Dimensions (W x D x H)	Working Height*	Total Btu/Hr	No. of Burners	No. of Drawers	Shipping Dimensions (W x D x H)	Approx. Ship. Wt.
VCRG24-M	24"W x 30.5" D x 16" H	12½"	50,000	2	1	29" W x 36" D x 20" H	244 lbs / 111 kg
VCRG36-M	36"W x 30.5" D x 16" H	12½"	75,000	3	1	41" W x 36" D x 20" H	346 lbs / 157 kg
VCRG48-M	48"W x 30.5" D x 16" H	12½"	100,000	4	1	53" W x 36" D x 20" H	437 lbs / 198 kg

*These are nominal dimensions and can vary by +1.75" with adjustable legs.

This appliance is manufactured for commercial use only and is not intended for home use.

As continued product improvement is a policy of Vulcan, specifications are subject to change without notice.