LPG SST

Height: 15.1" Width: 8.6" Depth: 10.0"
(38.4cm) (21.8cm) (25.4cm)

- Large, clear bean hopper merchandises 6 lb (2.72kg) of fresh regular, decaf or specialty coffee beans
- Easy access on back for grind weight adjustment
- Four year warranty on grinding burrs
- Just 8.64” (21.95cm) wide and a low profile height of 15.1” (38.4cm)
- Powered by quiet, high torque motor
- Professional grind provided by large 3.19” (8.1cm) diameter burrs powered by quiet, low speed, high torque motor

Agency:

Intertek LISTED

Specifications

Product #: 20580.0001

Finish: Stainless

Hoppers: One

Hopper Capacity: 6.00 lbs (2.722 kgs)

Additional Features

Electrical & Capacity

Volts*	Amps	Watts	Cord Attached	Plug Type	8oz cups/hr 236ml cups/hr	Input H²O Temp.	Phase	# Wires plus Ground	Hertz
120	3	360	Yes	NEMA 5-15P	-	60°F (15.5°C)	1	2	60

*When a BUNN is machine rated 120/208-240V, 120/208V or 120/240V, the higher voltage is the supply voltage needed to power the machine. The 120V is there to supply power to some components rated 120V in the machine, but it is not the supply voltage and would not power the machine if the machine is marked with the before mentioned ratings.

Plumbing Requirements

PSI	kPa	Fitting Supplied	Water Flow Required (GPM)
-	-	-	-

⚠ **WARNING:**

CAD Drawings

2D	Revit	KLC
●		

BUNN® reserves the right to change specifications and product design without notice. Such revisions do not entitle the buyer to corresponding changes, improvements, additions or replacements for previously purchased equipment. For most current specifications and other info visit bunn.com.

Last Updated: 07/08/2025

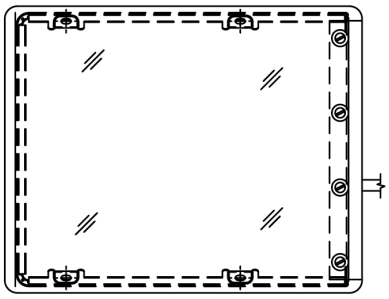

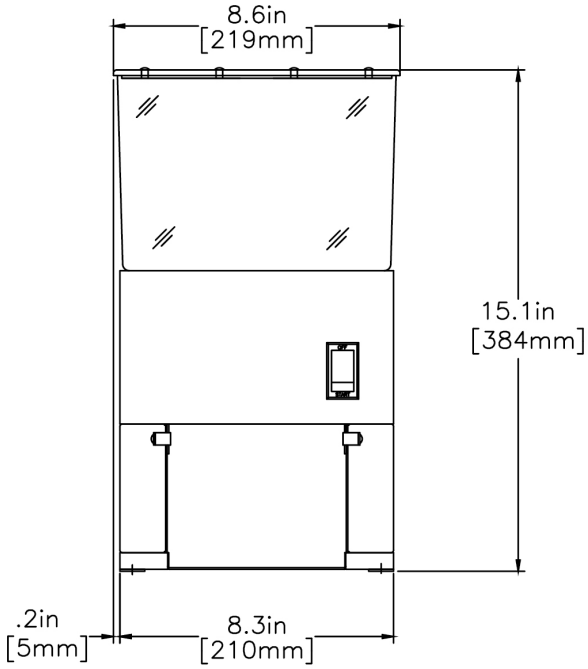

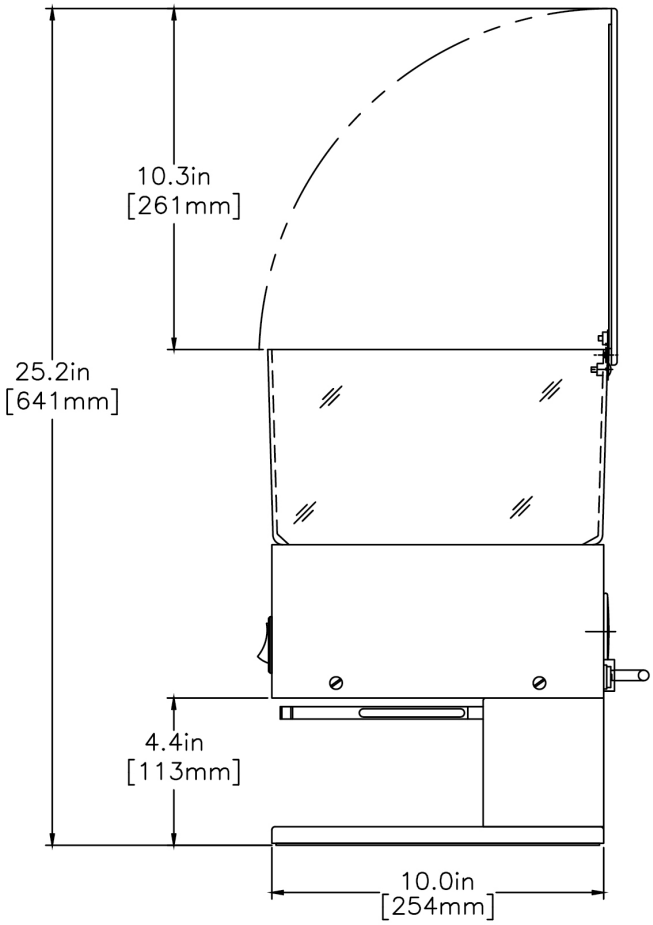

	Unit			Shipping				
	Height	**Width**	**Depth**	**Height**	**Width**	**Depth**	**Weight**	**Volume**
English	15.1 in.	8.6 in.	10.0 in.	23.8 in.	12.9 in.	15.0 in.	22.550 lbs	2.654 ft^3
Metric	38.4 cm	21.8 cm	25.4 cm	60.3 cm	32.7 cm	38.1 cm	10.229 kgs	0.075 m^3

BUNN® reserves the right to change specifications and product design without notice. Such revisions do not entitle the buyer to corresponding changes, improvements, additions or replacements for previously purchased equipment. For most current specifications and other info visit bunn.com.

Last Updated: 07/08/2025

Related Products & Accessories: LPG SST(20580.0001)

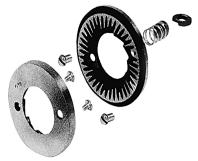			
BURR SET KIT, NEW	BURR SET KIT, TURKISH GRIND	SPRING PLATE, DECHAFFING	KIT, FINE GRIND DECHAFFER
Product #: 05861.1002[2]	Product #: 11285.1000[2]	Product #: 20588.0000[2]	Product #: 43724.0000[2]

[1]NSF Certified [2]NSF Certified with spec sheet model listed [3]NSF Certified under Solventum Purification [4]NSF Certified under Mavea LLC [5]NSF Certified under Zojirushi [6]NSF Certified under Qins Inc [7]NSF COMPONENT Certified

BUNN® reserves the right to change specifications and product design without notice. Such revisions do not entitle the buyer to corresponding changes, improvements, additions or replacements for previously purchased equipment. For most current specifications and other info visit bunn.com.

Last Updated: 07/08/2025

Serving & Holding Options: LPG SST(20580.0001)

Serving and Holding selections are currently unavailable. Please contact your sales representative to find out more information.

[1]NSF Certified [2]NSF Certified with spec sheet model listed [3]NSF Certified under Solventum Purification [4]NSF Certified under Mavea LLC [5]NSF Certified under Zojirushi [6]NSF Certified under Qins Inc [7]NSF COMPONENT Certified

BUNN® reserves the right to change specifications and product design without notice. Such revisions do not entitle the buyer to corresponding changes, improvements, additions or replacements for previously purchased equipment. For most current specifications and other info visit bunn.com.

Last Updated: 07/08/2025