TRUE MANUFACTURING CO., INC.
U.S.A. FOODSERVICE DIVISION

2001 East Terra Lane • O'Fallon, Missouri 63366-4434 • (636)240-2400
Fax (636)272-2408 • Toll Free (800)325-6152 • Intl Fax# (001)636-272-7546
Parts Dept. (800)424-TRUE • Parts Dept. Fax# (636)272-9471 • www.truemfg.com

Project Name: _____

Location: _____

Item #: _____ *Qty:* _____

Model #: _____

AIA #

SIS #

Model:
GDM-05PT-HC~FGD01

Glass Door Merchandiser:

Swing Door Pass-Thru Counter-Top Refrigerator with Hydrocarbon Refrigerant~Framed Glass Door Version 01

GDM-05PT-HC~FGD01

- The world's #1 manufacturer of glass door merchandisers.
- True's commitment to using the highest quality materials and oversized refrigeration systems provides the user with colder product temperatures, and lower utility costs in an attractive merchandiser that brilliantly displays packaged food and beverages. Pass-thru design allows for convenient restocking, fast service, and attractive display.
- Factory engineered, self-contained, capillary tube system using environmentally friendly R290 hydro carbon refrigerant that has zero (0) ozone depletion potential (ODP), & 0.02 global warming potential (GWP).
- High capacity, factory balanced refrigeration system that maintains cabinet temperatures of 33°F to 38°F (.5°C to 3.3°C) for the best in food preservation.
- Exterior - non-peel or chip black powder coated cold rolled steel; durable and permanent.
- Interior - attractive, white aluminum interior liner with stainless steel floor.
- Self closing doors. Positive seal, torsion type closure system.
- "Low-E", double pane thermal insulated glass door assemblies with mitered plastic channel frames. The latest in energy efficient technology.
- LED interior lighting provides more even lighting throughout the cabinet. Safety shielded.
- Entire cabinet structure is foamed-in-place using a high density, polyurethane insulation that has zero ozone depletion potential (ODP) and zero global warming potential (GWP).

ROUGH-IN DATA

Specifications subject to change without notice.
Chart dimensions rounded up to the nearest ⅛" (millimeters rounded up to next whole number).

Model	Doors	Shelves	Cabinet Dimensions (inches) (mm) W	D†	H	HP	Voltage	Amps	NEMA Config.	Cord Length (total ft.) (total m)	Crated Weight (lbs.) (kg)
GDM-05PT-HC~FGD01	1 fr / 1 bk	2	24 608	23 584	36¼ 919	⅕ N/A	115/60/1	2.7 N/A	5-15P	9 2.74	165 75

† Depth does not include 1⅜" (35 mm) each side for door handles.

MADE WITH INNOVATION IN THE USA

natural refrigerant

1/26 Printed in U.S.A.

APPROVALS:

AVAILABLE AT:

Model:

GDM-05PT-HC~FGD01

Glass Door Merchandiser:

Swing Door Pass-Thru Counter-Top Refrigerator with Hydrocarbon Refrigerant~Framed Glass Door Version 01

STANDARD FEATURES

DESIGN

- True's commitment to using the highest quality materials and oversized refrigeration systems provides the user with colder product temperatures, and lower utility costs in an attractive merchandiser that brilliantly displays packaged food and beverages.

REFRIGERATION SYSTEM

- Factory engineered, self-contained, capillary tube system using environmentally friendly R290 hydrocarbon refrigerant that has zero (0) ozone depletion potential (ODP), & 0.02 global warming potential (GWP).
- High capacity, factory balanced refrigeration system that maintains cabinet temperatures of 33°F to 38°F (.5°C to 3.3°C) for the best in food preservation.
- State of the art, electronically commutated evaporator and condenser fan motors. ECM motors operate at higher peak efficiencies and move a more consistent volume of air which produces less heat, reduces energy consumption and provides greater motor reliability.

CABINET CONSTRUCTION

- Exterior - non-peel or chip black powder coated cold rolled steel; durable and permanent.
- Interior - attractive, white aluminum liner with stainless steel floor.
- Insulation - entire cabinet structure is foamed-in-place using a high density, polyurethane insulation that has zero ozone depletion potential (ODP) and zero global warming potential (GWP).
- Cabinet fitted with leg levelers.
- Illuminated exterior sign panel. Variety of sign options available.

DOORS

- "Low-E", double pane thermal insulated glass door assemblies with mitered plastic channel frames. The latest in energy efficient technology.
- Each door fitted with 12" (305 mm) long extruded handle.
- Self closing doors. Positive seal, torsion type closure system.
- Magnetic door gaskets of one piece construction, removable without tools for ease of cleaning.

SHELVING

- Two (2) adjustable, heavy duty PVC coated wire shelves 19½"L x 18"D (496 mm x 458 mm). Four (4) chrome plated shelf clips included per shelf.
- Shelf support pilasters made of same material as cabinet interior; shelves are adjustable on ½" (13 mm) increments.

LIGHTING

- LED interior lighting provides more even lighting throughout the cabinet. Safety shielded.

MODEL FEATURES

- Evaporator is epoxy coated to eliminate the potential of corrosion.
- Pass-thru design allows for convenient rear loading and front access for serving.
- See our website www.truemfg.com for latest color and sign offerings.
- NSF/ANSI Standard 7 compliant for open food product.

ELECTRICAL

- Unit completely pre-wired at factory and ready for final connection to a 115/60/1 phase, 15 amp dedicated outlet. Cord and plug set included.

115/60/1
NEMA-5-15R

OPTIONAL FEATURES/ACCESSORIES

Upcharge and lead times may apply.

- ❑ 4" (102 mm) legs.
- ❑ White exterior.
- ❑ Stainless steel exterior.
- ❑ Stainless steel interior with gray shelving.
- ❑ Red wine thermostat.
- ❑ White wine thermostat.
- ❑ Chocolate thermostat.
- ❑ Barrel lock (factory installed).
- ❑ Additional shelving.
- ❑ 1¼" (32 mm) pricing strips.

PLAN VIEW

EXTERIOR

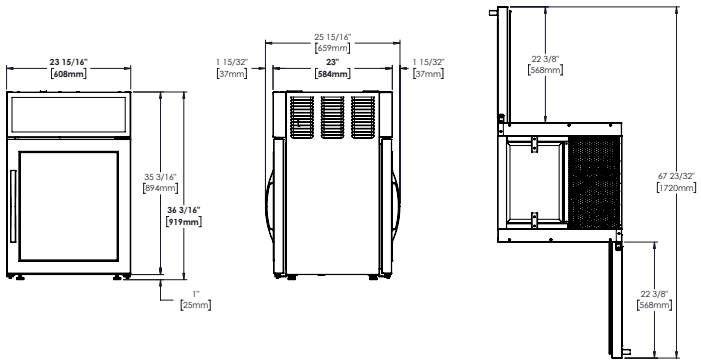

INTERIOR

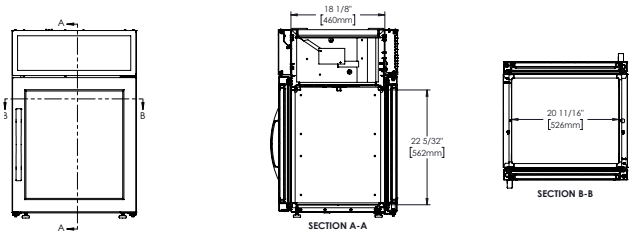

METRIC DIMENSIONS ROUNDED UP TO THE NEAREST WHOLE MILLIMETER

SPECIFICATIONS SUBJECT TO CHANGE WITHOUT NOTICE

Model	Elevation	Right	Plan	3D	Back
GDM-05PT-HC~FGD01					

TRUE MANUFACTURING CO., INC.

2001 East Terra Lane • O'Fallon, Missouri 63366-4434 • (636)240-2400 • Fax (636)272-2408 • Toll Free (800)325-6152 • Intl. Fax# (001)636-272-7546 • www.truemfg.com