TGN-1R-1S

TGN-2R-2S

## ⚠ WARNING!

**Be sure to read and fully understand** this document before installing, operating, maintaining or servicing this appliance. Failure to do so can result in appliance failure, property damage, serious injury or death. Appliance failure, injury or property damage due to improper installation is not covered by warranty.

## USER ACTION!

**TRUE tracks the history of your appliance** by its serial number. For easy reference, record your appliances full model name and serial number below. This information is on your serial label. Serial label location varies by appliance.

**Model Name:**

**Serial Number:**

**True Manufacturing Co., Inc.**

2001 East Terra Lane • O'Fallon, Missouri 63366-4434
(636) 240-2400 • FAX: (636)-272-2408

International FAX: (636)-272-7546 • (800)-325-6152

Parts Department: (800)-424-TRUE (424-8783)
Parts Department FAX: (636)-272-9471

# INSTALLATION MANUAL

## TGN Refrigerators & Freezers

Original Instructions

**North America – Canada and Caribbean**
**Warranty Phone** +1 855-878-9277
**Warranty Fax** +1 636-980-8510
**Warranty Email** warrantyinquiries@truemfg.com
**Technical Phone** +1 855-372-1368
**Technical Email** service@truemfg.com
7:00 am–6:00 pm CST Monday–Friday,
8:00 am–12:00 pm Saturday

**Mexico**
**Phone** +52 555-804-6343/44
service-mexicocity@truemfg.com
9:00 am–5:30 pm M–F

**Latin America**
**Phone:** +52 555-804-6343/44
servicelatam@truemfg.com
9:00 am–5:30 pm M–F

**UK, Ireland, Middle East, Africa & India**
**Phone:** +44 (0) 800-783-2049
Service-emea@truemfg.com
8:30 am–5:00 pm M–F

**Australia**
**Phone:** +61 2-9618-9999
service-aus@truemfg.com
8:30 am–5:00 pm M–F

**European Union & Commonwealth of Independent States**
**Phone:** +41 61 563 0705
service-emea@truemfg.com
8:00 am–5:00 pm M–F

857039-E

TEC_TM_076 | REV. E | EN

10/23/2024

# THANK YOU

## FOR YOUR PURCHASE

### Congratulations!

The primary purpose of this document is to assist the installation, maintenance, and servicing of your TRUE appliance. This document contains information important to safety, operation, maintenance, and servicing. **DO NOT** discard this document. TRUE is solely the appliance manufacturer. For assistance locating a refrigeration service technician in your area for installation, servicing or maintenance, please visit our Service Company Locator at **truemfg.com/support/service-locator**.

**NOTICE!**

Your appliance may not exactly match the figures shown in this manual.

### Contents

**Preface**
Signal & Symbol Definitions ..... 3

**Important Safety Information**
Basic Safety & Operation Warnings ..... 4
Personal Injury Warnings ..... 5
Hydrocarbon Refrigerant Warnings ..... 6
Appliance Disposal Warnings ..... 6
Electrical Safety Warnings ..... 7

**About Your Appliance & Installation Requirements**
Appliance Specifications ..... 8
Clearances ..... 9
Electrical Requirements ..... 10
Electrical Installation & Safety ..... 10

**Installation & Setup**
Uncrating ..... 11
Appliance Location ..... 13
Leveling Screw, Leg or Castor Installation ..... 13
Level the Appliance ..... 15
Seal the Appliance to the Floor ..... 15
Shelf Installation ..... 16

**Appliance Operation**
Startup ..... 18
Temperature Control & Light Switch Location ..... 19
General Sequence of Operation ..... 20

**Maintenance & Servicing**
Component Replacement ..... 23
Recommended Maintenance ..... 24
Condenser Coil Cleaning ..... 26
General Surface Care & Cleaning ..... 28
Stainless Steel Care & Cleaning ..... 29
8 Tips to Help Prevent Rust on Stainless Steel ..... 30

**Warranty**
Warranty Information ..... 31

# Preface

The warning, guidelines, and recommendations within this document are meant to prevent appliance damage, property damage, injury, or death. Please carefully read all warnings, guidelines, and recommendations before proceeding to ensure the continued safe use and maintenance of your TRUE appliance.

## Signal & Symbol Definitions

Below are symbols you may see in this document. Some symbols may not appear.

| Signal Word Definitions | |
|---|---|
| ⚠ DANGER! | An imminently hazardous situation which, if not avoided, will result in serious injury or death. |
| ⚠ WARNING! | A potentially hazardous situation which, if not avoided, can result in serious injury or death. |
| ⚠ CAUTION! | A potentially hazardous situation which, if not avoided, may result in minor or moderate injury; an unsafe practice. |
| ! USER ACTION! | User action alert, follow all recommendations to avoid appliance or product damage. |
| ! NOTICE! | Important information not related to hazards or risk of personal injury. |

| Safety Symbols | |
|---|---|
| | **Safety alert**; alerts reader to potential physical injury hazards. Obey all safety messages following this symbol to avoid possible injury or death. |
| | **Flammable material;** risk of fire or explosion. |
| | **Electrical shock** hazard. |
| | **Tipping hazard**; tip-over hazard. |
| | **Sharp element**; cut or sever hazard. |
| | **Eye hazard**; risk of eye injury. |
| | **Exploding pressurized cylinder** hazard. |
| | **Slippery surface** hazard. |
| | **Crush or cut** hazard. |

| Additional Symbols | |
|---|---|
| | **Mandatory action alert symbol**; alerts reader to required or recommended actions. Obey all messages and recommendations following this symbol to avoid appliance or product damage. |
| NOTICE › | **Important information** not related to hazards or risk of personal injury. |
| | **Review and understand** the installation manual before installing, operating, or servicing. |
| | Wear **eye protection**. |
| | Wear **protective gloves**. |
| | **Secure gas cylinders** to prevent falling cylinders. |
| | **DO NOT** use extension cord. |
| | **DO NOT** use adaptor plugs. |
| | **DO NOT** dispose of with other household waste. |

# Important Safety Information

## Basic Safety & Operation Warnings

Follow basic safety precautions, including the following, to reduce risk of personal injury, electric shock, fire, or death.

### ⚠ WARNING!

**Be sure to read and fully understand this document before installing, operating, maintaining, or servicing this appliance. Failure to do so can result in appliance failure, property damage, serious injury, or death. Appliance failure, personal injury, or property damage due to improper installation is not covered by warranty.**

- Failure to install, operate, and maintain the appliance as detailed in this document will negatively affect safety, appliance performance, component life, and warranty coverage.
- Only qualified technicians should install and service the appliance. For assistance locating a refrigeration service technician in your area for installation, servicing or maintenance, please visit our Service Company Locator at **truemfg.com/support/service-locator**. TRUE is solely the appliance manufacturer and is not responsible for installation.
- This appliance is not to be used, cleaned, or maintained by persons (including children) with reduced physical, sensory, or mental capabilities or lack of experience and knowledge, without proper supervision or instruction concerning the appliance by a person responsible for their safety.
- **DO NOT** install or operate equipment that has been misused, abused, neglected, damaged, or altered/modified from original manufactured specifications.
- **DO NOT** modify or alter the appliance. Improper alterations can result in electric shock, personal injury, fire, or death.
- **DO NOT** use electrical appliances inside the food storage compartments of the appliance unless the appliances are approved by the manufacturer.
- The appliance owner is responsible for performing a Personal Protective Equipment (PPE) Hazard Assessment and to ensure adequate protection during maintenance and cleaning procedures.
- Use appropriate tools, safety equipment, and PPE during installation and servicing.
- Only use the appliance for its intended purpose as described in this document.
- All shelving must be properly installed and adhere to load limits. Incorrect installation and improperly loaded or overloaded shelves can result in appliance damage, product damage, or personal injury.
- Keep the area surrounding the appliance clean and dry to avoid personal injury or appliance damage from debris or pests.

### USER ACTION!

- The appliance must be installed in accordance with all applicable laws, codes, and regulations.
- This appliance is to be installed in accordance with the Safety Standard for Refrigeration Systems, ANSI/ASHRAE 15.

### NOTICE!

The manufacturer is not responsible for injury or damage resulting from improper, incorrect, and unreasonable use.

# Important Safety Information (cont.)

## Personal Injury Warnings

| ⚠ DANGER! | |
|---|---|
| | **DO NOT** allow children to play with or in the appliance. Child entrapment or personal injury can occur. |
| | **DO NOT** store or use the following in the vicinity of this or any other appliance:<br>• Gasoline or other flammable vapors and liquids<br>• Combustible or explosive substances, such as aerosol cans with a flammable propellant<br>• Other volatile or flammable substances |
| | **Contact TRUE Manufacturing to locate refrigerant lines and electrical wiring** before drilling, cutting or puncturing interior or exterior walls. Failure to do so could result in damage, personal injury, or death. |

| ⚠ WARNING! | |
|---|---|
| | **Only qualified technicians should install and service the appliance. For assistance locating a refrigeration service technician in your area for installation, servicing or maintenance, please visit our Service Company Locator at truemfg.com/support/service-locator. TRUE is solely the appliance manufacturer and is not responsible for installation.**<br>• Use appropriate tools, safety equipment, and personal protective equipment (PPE) during installation and servicing.<br>• **DO NOT** touch the cold surfaces in the freezer compartment when hands are damp or wet. Skin may stick to extremely cold surfaces. |
| | **This product can expose you to chemicals** including Di-(2-Ethyl hexyl) Phthalate (DEHP), which is known to the State of California to cause cancer and birth defects or other reproductive harm. For more information go to **P65warnings.ca.gov**. |
| | **Slippery Surfaces!** Moisture from improper drainage can create slippery surfaces near the appliance. It is your duty to immediately warn your customers of, and dry, the slippery surface. All wet floor areas must be marked with a wet floor sign. |
| | **Sharp edges!** Take care when moving, installing, cleaning, servicing, and maintaining the appliance to avoid cuts. Be sure to take care when reaching under the appliance or handling metal components.<br>• Keep fingers out of pinch point areas, such as the space between appliance doors and surrounding cabinetry. Take care closing doors with children nearby. |
| | **Tip over hazard!** Appliance may pose a tipping hazard when uncrating, installing, or moving the appliance. Take appropriate safety precautions. Use of tip over restraints may only reduce (not eliminate) the tipping hazard. Never allow children to climb or hang on drawers, doors, or shelves. |
| | **Crush or cut hazard**! Keep clear when uncrating, installing, moving, or servicing the appliance. |
| | **Risk of electric shock or burn!** See "Electrical Safety Warnings" for more information. |

# Important Safety Information (cont.)

## Appliance Disposal Warnings

**⚠ DANGER!**

**Risk of child entrapment!**

Children can get trapped inside discarded appliances and suffocate. Never dispose of your appliance without taking precautions to prevent child entrapment, even if the appliance only sits unattended for a short period of time.

**Child entrapment precautions include the following:**

- Remove all doors (or drawers for drawer appliances).
- Leave all interior drawers and shelving in place to make climbing (and fitting) inside the appliance more difficult.

**Risk of fire or explosion!** Flammable refrigerant and insulation used. Dispose of the appliance in accordance with all applicable laws, codes, and regulations. Follow all safety precautions associated with handling flammable refrigerant and insulation.

**DO NOT** dispose of your appliance with household waste.

## Hydrocarbon Refrigerant Warnings

TRUE appliances use hydrocarbon refrigerant (R-290/513A/600a). Check the serial label to identify the appliance's refrigerant. Serial label location varies by model.

**⚠ DANGER!**

**Risk of fire or explosion! Flammable refrigerant used.**

- All servicing and maintenance must be performed by qualified technicians to minimize the risk of fire or personal injury due to incorrect parts or improper service.
- Check the serial label to identify the appliance's refrigerant. Serial label location varies by model.
- **DO NOT** damage the refrigeration system during transportation and installation.
- If the appliance is damaged, check the refrigeration system for damage before installing or putting into service.
- Never use sharp objects or tools to remove ice or frost. **DO NOT** use mechanical devices to accelerate defrost.
- Dispose of the appliance in accordance with all applicable laws, codes, and regulations. Follow all safety precautions associated with handling flammable refrigerant.
- **DO NOT** use electrical appliances inside the food storage compartments of the appliances unless the appliances are of the type recommended by the manufacturer.

# Important Safety Information (cont.)

## Electrical Safety Warnings

### ⚠ DANGER!

**Risk of electric shock, burn, or fire! Failure to comply with these electrical warnings may result in appliance damage, property damage, electrical shock, burns, or fire leading to serious personal injury or death.**

- It is the appliance owner's responsibility to ensure the electrical connection meets all applicable building codes.
- Before connecting the appliance to the power supply, verify the supply voltage and circuit rating match the appliance. Correct improper supply voltage or circuit size immediately.
- Before connecting the appliance to the power supply, verify the power supply is correctly grounded. If the power supply is not grounded, correct immediately. TRUE recommends hiring a qualified electrician to inspect the wall outlet and circuit to ensure they are properly grounded.
- **DO NOT** clean appliance with a pressure washer or hose. DO NOT immerse power cord in water.
- Always unplug the appliance or disconnect power before installation or servicing. Powering off an electronic control or setting temperature controls to 0 (off position) does not remove power from all components.
- The appliance should receive power from its own individual dedicated electrical circuit to avoid overloading the power supply.
- **The original equipment manufacturer (OEM) power cord has a grounding plug to minimize the possibility of electrical shock.**
  - **Never remove the ground prong from the power cord!** For personal safety, this appliance must be properly grounded.
  - **Never use an extension cord!** An extension cord is any component that adds length to the OEM power cord when connecting the cord to a power source.
  - **Never use an adapter plug!** An adapter plug alters the OEM plug configuration when connecting the plug to a power source.
- **Never use a power cord that shows cracks or abrasion damage along its length or at either end.**
  - Immediately have a qualified technician replace damaged OEM power cords with OEM components.
  - **Never unplug the appliance by pulling on the power cord!** Always grip the plug and pull the plug straight out of the outlet.
  - Take care to prevent rolling over or damaging the power cord when moving the appliance.
  - **Never use the power cord to prevent appliance movement!** Always use adequate means to keep the appliance in place without transmitting stress to the power cord.
  - Keep power cord away from heated surfaces.
  - **DO NOT** let power cord hang over edge of table or counter.
  - **DO NOT** excessively bend or place heavy articles on the power cord.

### ❗ NOTICE!

**TRUE will not warranty the following:**

- Compressor failures due to improper incoming voltage.
- Appliance with tampered OEM power cords.
- Appliance connected to adapters or extension cords.

For more details, see TRUE's full warranty statement.

# About Your Appliance & Installation Requirements

**USER ACTION!**

TRUE is not responsible for damage incurred during shipment. Always carefully inspect for freight damage before receiving and installing your appliance. If there is damage, note all damage on the delivery receipt, immediately file a claim with the delivery freight carrier, and contact TRUE. **Do not install the appliance or put it in service.**

Thank you for choosing TRUE Manufacturing to meet your refrigeration needs. TRUE highly recommends a qualified technician and electrician install your appliance to ensure correct installation. The cost of professional installation is money well spent. Only qualified technicians should install and service the appliance.

For assistance locating a refrigeration service technician in your area for installation, servicing or maintenance, please visit our Service Company Locator at **truemfg.com/support/service-locator**. TRUE is solely the appliance manufacturer and is not responsible for installation.

The appliance owner is responsible for proper installation and maintaining the appliance as described in this document. Routine care and maintenance procedures are not covered by TRUE's warranty.

## Appliance Specifications

Some things to know about your appliance are as follows:

- Appliance tested for IEC to ISO Climate Class 5 [104°F (40°C) temperature, 40% relative humidity].
- For proper operation, ambient temperatures shall not be less than 60°F (15.5°C) and no greater than 104°F (40°C).
- Appliance is not for the storage and/or display of potentially hazardous foods when the temperature control is set above 41˚F (5˚C).
- Appliance is not suitable for outdoor use, unless otherwise stated on the serial label.
- Appliance is not suitable for an area where a pressure washer or hose may be used.
- Always plug the appliance into its own individual dedicated electrical circuit!
- **DO NOT** use extension cords or adapter plugs.
- Before connecting your appliance to the power supply, verify the incoming voltage (±5%) and the amps match the operation ratings on the appliance's serial label. Correct improper incoming voltage or amps immediately. Serial label location varies by model.
- Before connecting your appliance to the power supply, verify the power supply is correctly grounded. If the power supply is not grounded, correct immediately.
- Ensure the installation location will provide adequate clearances and sufficient airflow for the appliance. See "Clearances" (pg. 9).
- Read and follow all warnings and maintenance instructions. Failure to do so may result in damage and void the warranty on your appliance.

# About Your Appliance & Installation Requirements (cont.)

## Clearances

**NOTICE!**

**Warranty is void if ventilation is insufficient.**

Be sure your appliance has the required surrounding clearances for ventilation purposes. Keep all ventilation openings in the appliance enclosure or structure housing the appliance clear of obstruction.

| MODEL | TOP | SIDES | BACK |
|---|---|---|---|
| TGN Freezer | 3" (76.2 mm) | 0" (0 mm) | 3" (76.2 mm) |
| TGN Refrigerator | 0" (0 mm) | 0" (0 mm) | 1" (25.4 mm) |

# About Your Appliance & Installation Requirements (cont.)

## Electrical Requirements

### USER ACTION!

Find a copy of the wiring diagram with our serial number lookup at **truemfg.com/support/serial-number-lookup.**

### Wire gauge chart (115V)

| 115 Volts | Distance in Feet to Center of Load | | | | | | | | | | | |
|---|---|---|---|---|---|---|---|---|---|---|---|---|
| AMPS | 20 | 30 | 40 | 50 | 60 | 70 | 80 | 90 | 100 | 120 | 140 | 160 |
| 2 | 14 | 14 | 14 | 14 | 14 | 14 | 14 | 14 | 14 | 14 | 14 | 14 |
| 3 | 14 | 14 | 14 | 14 | 14 | 14 | 14 | 14 | 14 | 14 | 14 | 12 |
| 4 | 14 | 14 | 14 | 14 | 14 | 14 | 14 | 14 | 14 | 12 | 12 | 12 |
| 5 | 14 | 14 | 14 | 14 | 14 | 14 | 14 | 12 | 12 | 12 | 10 | 10 |
| 6 | 14 | 14 | 14 | 14 | 14 | 14 | 12 | 12 | 12 | 10 | 10 | 10 |
| 7 | 14 | 14 | 14 | 14 | 14 | 12 | 12 | 12 | 10 | 10 | 10 | 8 |
| 8 | 14 | 14 | 14 | 14 | 12 | 12 | 12 | 10 | 10 | 10 | 8 | 8 |
| 9 | 14 | 14 | 14 | 12 | 12 | 12 | 10 | 10 | 10 | 8 | 8 | 8 |
| 10 | 14 | 14 | 14 | 12 | 12 | 10 | 10 | 10 | 10 | 8 | 8 | 8 |
| 12 | 14 | 14 | 12 | 12 | 10 | 10 | 10 | 8 | 8 | 8 | 8 | 6 |
| 14 | 12 | 12 | 12 | 10 | 10 | 10 | 8 | 8 | 8 | 6 | 6 | 6 |
| 16 | 12 | 12 | 12 | 10 | 10 | 8 | 8 | 8 | 8 | 6 | 6 | 6 |
| 18 | 12 | 12 | 10 | 10 | 8 | 8 | 8 | 8 | 8 | 8 | 8 | 5 |
| 20 | 12 | 12 | 10 | 10 | 8 | 8 | 8 | 6 | 6 | 6 | 5 | 5 |
| 25 | 10 | 10 | 10 | 8 | 8 | 6 | 6 | 6 | 6 | 5 | 4 | 4 |
| 30 | 10 | 10 | 8 | 8 | 6 | 6 | 6 | 6 | 5 | 4 | 4 | 3 |

### Wire gauge chart (230V)

| 230 Volts | Distance in Feet to Center of Load | | | | | | | | | | | |
|---|---|---|---|---|---|---|---|---|---|---|---|---|
| AMPS | 20 | 30 | 40 | 50 | 60 | 70 | 80 | 90 | 100 | 120 | 140 | 160 |
| 5 | 14 | 14 | 14 | 14 | 14 | 14 | 14 | 14 | 14 | 14 | 14 | 14 |
| 6 | 14 | 14 | 14 | 14 | 14 | 14 | 14 | 14 | 14 | 14 | 14 | 12 |
| 7 | 14 | 14 | 14 | 14 | 14 | 14 | 14 | 14 | 14 | 14 | 12 | 12 |
| 8 | 14 | 14 | 14 | 14 | 14 | 14 | 14 | 14 | 14 | 12 | 12 | 12 |
| 9 | 14 | 14 | 14 | 14 | 14 | 14 | 14 | 14 | 12 | 12 | 12 | 10 |
| 10 | 14 | 14 | 14 | 14 | 14 | 14 | 14 | 12 | 12 | 12 | 10 | 10 |
| 12 | 14 | 14 | 14 | 14 | 14 | 14 | 12 | 12 | 12 | 10 | 10 | 10 |
| 14 | 12 | 12 | 12 | 12 | 12 | 12 | 12 | 12 | 10 | 10 | 10 | 8 |
| 16 | 12 | 12 | 12 | 12 | 12 | 12 | 12 | 10 | 10 | 10 | 8 | 8 |
| 18 | 12 | 12 | 12 | 12 | 12 | 12 | 10 | 10 | 10 | 8 | 8 | 8 |
| 20 | 12 | 12 | 12 | 12 | 10 | 10 | 10 | 10 | 10 | 8 | 8 | 8 |
| 25 | 10 | 10 | 10 | 10 | 10 | 10 | 10 | 10 | 8 | 8 | 6 | 6 |
| 30 | 10 | 10 | 10 | 10 | 10 | 10 | 8 | 8 | 8 | 6 | 6 | 6 |

## Electrical Installation & Safety

### DANGER!

- **Never use an extension cord!** An extension cord is any component that adds length to the OEM power cord when connecting the cord to a power source.
- **Never use an adapter plug!** An adapter plug alters the OEM plug configuration when connecting the plug to a power source.
- **Always use the correct outlet.** See "NEMA Plug Configurations" below.

### NEMA Plug Configurations

**60 HZ USE ONLY!**

TRUE uses these types of NEMA plugs shown. If you **DO NOT** have the proper outlet, have a licensed electrician verify and install the correct power source.

### International (IEC) Plugs Only

International appliances may be supplied with a power cord that will require installation. Install this cord before connecting the appliance to a power source.

**NOTICE ›** International plug configurations will vary by country and voltage.

#### *Installation*

Fully seat the power cord into the appliance receptacle until it locks in position. See fig. 1.

#### *Removal*

Depress the red button. See fig. 2.

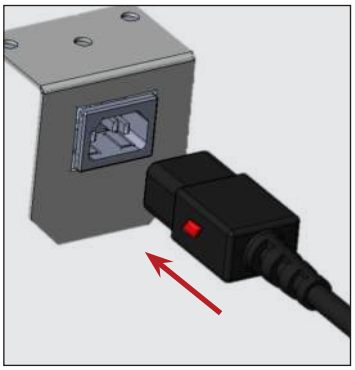

***Fig. 1.*** Fully insert the power cord into the receptacle.

***Fig. 2.*** Push the red button to remove the plug.

# Installation & Setup

**⚠ DANGER!**

**Risk of electrical shock or burn!** Powering off an electronic control or setting temperature controls to the 0 (off) position does not remove power from all components. Unplug the appliance or disconnect power before installation or servicing.

**⚠ WARNING!**

**Only qualified technicians** should install and service the appliance. For assistance locating a refrigeration service technician in your area for installation, servicing or maintenance, please visit our Service Company Locator at truemfg.com/support/service-locator/.

**The appliance owner is responsible** for performing a Personal Protective Equipment (PPE) hazard Assessment and to ensure adequate protection during maintenance and cleaning procedures.

**Use appropriate tools**, safety equipment, and PPE during installation and servicing.

**Sharp edges!** Take care when moving, installing, cleaning, servicing and maintaining the appliance to avoid cuts. Be sure to take care when reaching under the appliance or handling metal components. Keep fingers out of pinch point areas, such as the space between appliance doors and surrounding appliances. Take care closing doors with children nearby.

**Tip over hazard!** Appliance may pose a tipping hazard when uncrating, installing or moving the appliance. Take appropriate safety precautions. Use of tip over restraints may only reduce (not eliminate) the tipping hazard. Never allow children to climb or hang on drawers, doors or shelves.

**Crush or cut hazard!** Keep clear when uncrating, installing, moving, or servicing the appliance.

## Uncrating

**USER ACTION!**

- If the appliance is damaged, note all damage on the delivery receipt, immediately file a claim with the delivery freight carrier, and contact TRUE. **DO NOT install the appliance or put it in service.**
- If the appliance is laid on its back or side, be sure to leave the appliance upright twice the time it has been laying down (up to four (4) hours) before plugging the appliance into a power source. If this time exceeds four (4) hours, let the appliance sit upright for 24 hours before powering the appliance.

**NOTICE!**

Keys for appliances with door locks are located in the warranty packet.

### Required Tools

Required tools include (but may not be limited to) the following:

- Adjustable wrench
- Phillips screwdriver

# Installation & Setup (cont.)

### Required Tools

Required tools include (but may not be limited to) the following:

- Adjustable wrench
- Phillips screwdriver

### Procedure

1. Remove the outer packaging (cardboard and bubble wrap or Styrofoam corner and clear plastic). See fig. 1. Inspect for concealed damage. **Again, immediately file a claim with the freight carrier if there is damage.**

2. With an adjustable wrench, remove all shipping bolts securing the wood skid to the bottom of the appliance. See fig. 2.
**NOTICE ›** Move the appliance as close as possible to the final location before removing the wooden skid. Some models may require removing the front and/or rear grill/cover to access the shipping bolts.

3. If leveling legs or castors **will not be used**, remove the appliance from the wood skid and set the skid aside.
**NOTICE ›** **DO NOT** lift the appliance by the counter tops, doors, drawers, or grills.
If leveling legs or castors **will be used**, rotate the appliance on the skid (see fig. 3) and see the installation instructions on page 13.

***Fig. 1.*** Remove exterior packaging.

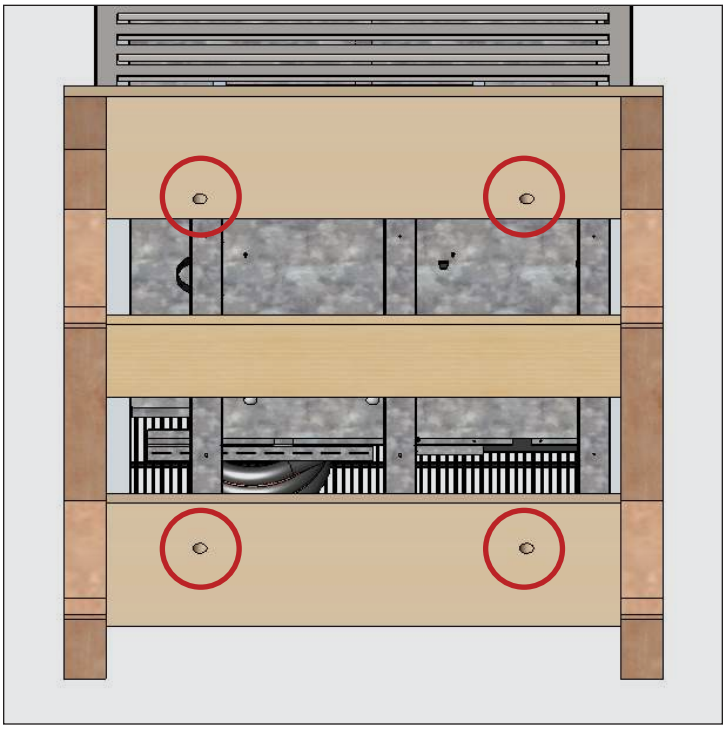

***Fig. 2.*** Shipping bolt locations.

***Fig. 3.*** When lifting unit, do not use countertops, doors/drawers, or grills as a lifting point.

# Installation & Setup (cont.)

## Appliance Location

- Ensure that the drain hose or hoses are positioned in the pan.
- Free the plug and cord from inside the lower rear of the appliance (**DO NOT** plug in).
- Place the appliance close enough to the electrical supply so that extension cords are never used.

## Leveling Screw, Leg, or Castor Installation

**⚠ WARNING!**

**Tipping hazard! ALWAYS** verify center leveling screws fully contact the floor after leveling the appliance.

**ALWAYS** be sure leveling legs or castors (and shims) are snug against the rail assembly or mounting plate.

**ALWAYS** verify center castors or leveling legs fully contact the floor after leveling the appliance. See fig. below.

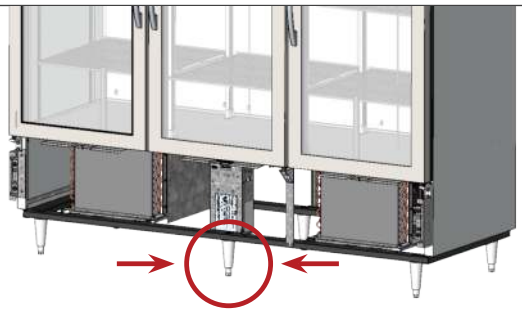

**Sharp edges!** Take care when moving, installing, cleaning, servicing and maintaining the appliance to avoid cuts. Be sure to take care when reaching under the appliance or handling metal components.

Leveling screws are provided to assist with leveling the appliance. Adjustable legs provide 6" (152 mm) of clearance under the appliance. Castors provide appliance mobility.

### Required Tools

Required tools include (but may not be limited to) the following:

- Adjustable Wrench

### Procedure – Leveling Screws

If leveling screws are not factory installed, then, with access to the appliance bottom, install the leveling screws into the threaded holes in the frame rail or appliance bottom. See figs. 1–3.

***Fig. 1.*** Leveling screw.

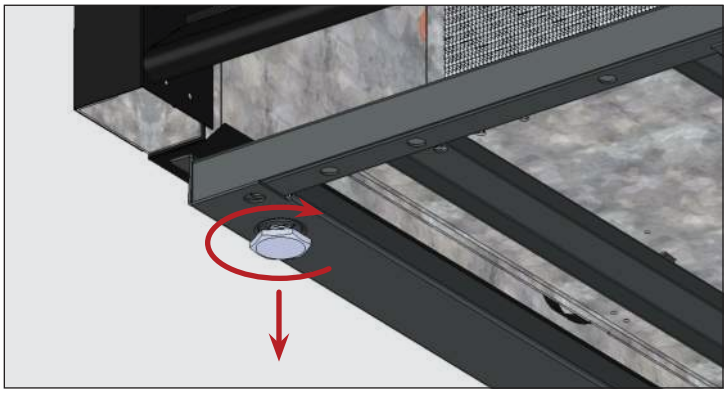

***Fig. 2.*** Turn the leveling screws clockwise to lower the appliance.

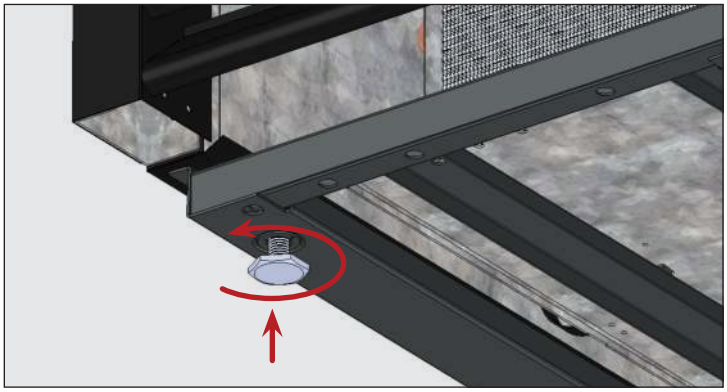

***Fig. 3.*** Turn the leveling screws counterclockwise to raise the appliance.

# Installation & Setup (cont.)

### Procedure – 6" (152 mm) Leveling Legs

1. Access the appliance bottom.
2. If present, remove the leveling screws.
3. Thread the leveling legs into the frame rail or appliance bottom. See figs. 4 and 5.
4. Verify that the appliance is level. See "Level the Appliance" (pg. 15).
5. If the appliance is not level, gently lift and support the low end of the appliance. Then, with an adjustable wrench, screw the leveling leg bottom stems in or out to level and support the appliance. See fig. 4 and 6.

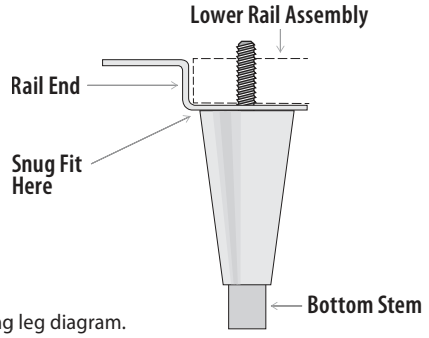


***Fig. 4.*** Leveling leg diagram.

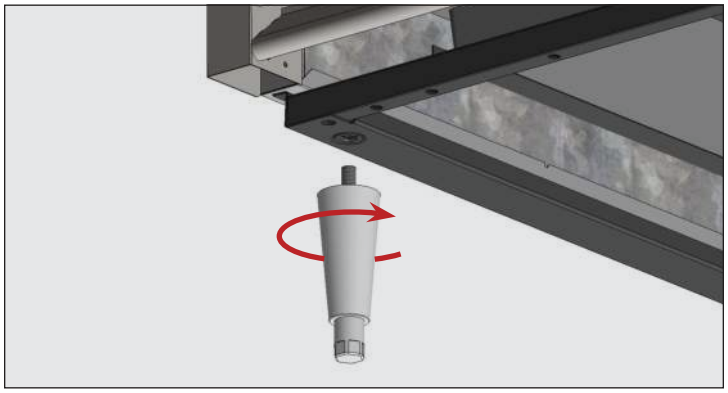

***Fig. 5.*** Screw the leveling legs into the threaded holes.

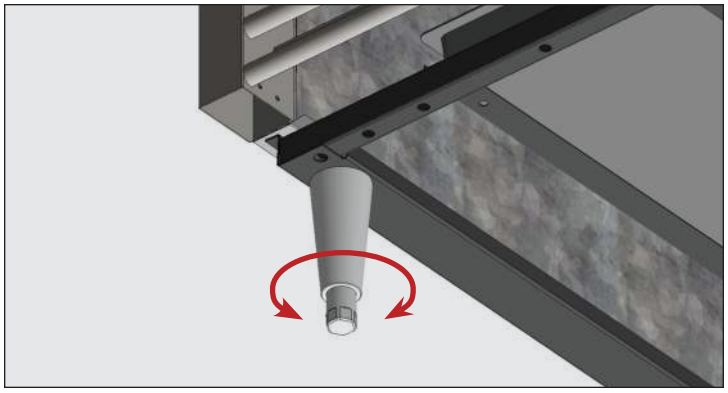

***Fig. 6.*** Turn the bottom stem to level the appliance.

### Procedure — Castors

**USER ACTION!**

Install castors with brakes in the front.

1. Access the appliance bottom.
2. If present, remove the leveling screws.
3. Thread the castors into the frame rail or appliance bottom. See figs. 7 and 8.
4. Verify the appliance is level. See "Level the Appliance" (pg. 15).
5. On the low end of the appliance, loosen the castor bolt enough to slide provided castor shims between the castor bearing and the bottom rail of the appliance. See fig. 9.
6. Install the desired number of shims. See fig. 9.
   - If more than one shim is used, be sure shim slots are offset. See fig. 10.
   - **DO NOT** use more than four (4) shims on a castor.
   - Be sure each shim touches the castor stem.
7. Tighten and secure the shims and castors.
8. Verify the appliance is level.
9. If the appliance is not level, repeat the steps 3 – 6 until the appliance is level and supported.

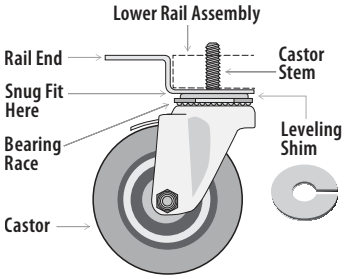


***Fig. 7.*** Castor diagram.

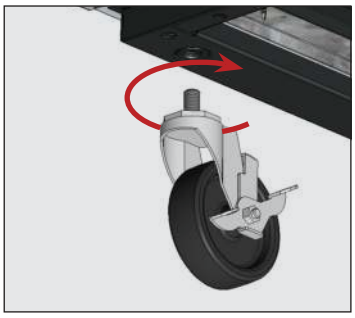

***Fig. 8.*** Screw the castors into the threaded holes.

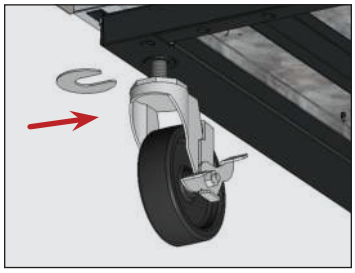

***Fig. 9.*** Insert the castor shim(s). be sure to tighten the castor stem.

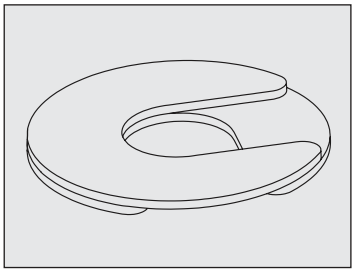

***Fig. 10.*** Install multiple shims with offset slots.

# Installation & Setup (cont.)

## Level the Appliance

**⚠ WARNING!**

**Tipping hazard! ALWAYS** verify center leveling screws fully contact the floor after leveling the appliance.

Proper leveling of your TRUE appliance is critical to operating success (for non-mobile appliances). Leveling impacts effective condensate removal and door operation.

See "Leveling Screw, Leg or Castor Installation" (pg. 13) for level adjustment and shimming information.

### Procedure

Position the appliance in its final installation location. Then, level the appliance front-to-back and side-to-side. See fig. 1.

1. Position the level on the inside floor of the appliance near the doors (level parallel to appliance front). Level the appliance.
2. Position the level at the inside rear of the appliance (level parallel to appliance back). Level the appliance.
3. Position the level on the left and right inside floor (level parallel to appliance sides). Level the appliance.

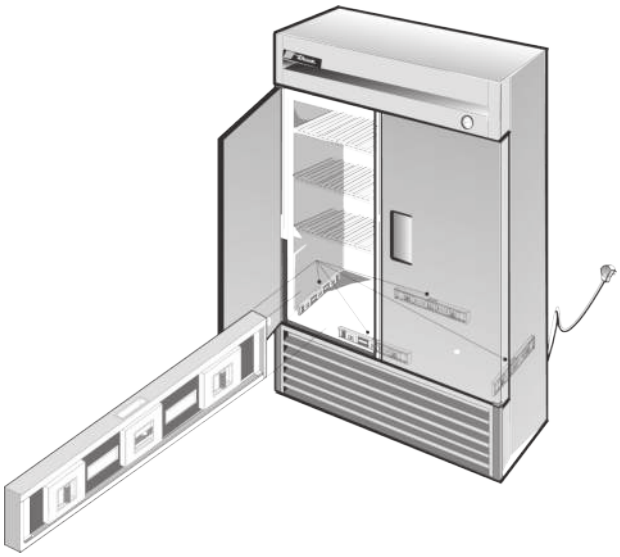

***Fig. 1.*** Measure the level along the perimeter of the interior floor.

## Seal the Appliance to the Floor

**USER ACTION!**

**Asphalt floors are susceptible to chemicals.** TRUE recommends installing a layer of tape between the asphalt and the sealant to protect the floor.

The following procedure describes sealing a non-mobile appliance to the floor for NSF standards of proper sanitary operation. Sealing the appliance to the floor prevents liquid spillage on adjacent surfaces of the floor from passing under inaccessible portions of the equipment.

This may not be required for your application.

### Procedure

1. Position the appliance in its final installation location. Be sure to leave adequate clearance between the back and sides per "Clearances" (pg. 9) to ensure proper ventilation.
2. Level the appliance front-to-back and side-to-side. See “Level the Appliance” (pg. 15).
3. Draw an outline of the appliance base on the floor.
4. Raise and block the front side of the appliance.
5. Apply a bead of NSF-approved sealant (see list below) to the floor, 1/2" (13 mm) inside the front part of the outline drawn in step 3. The bead of sealant must be heavy enough to seal the entire appliance surface when the appliance is lowered on top of the sealant.
6. Raise and block the rear of the appliance.
7. Apply sealant to the floor on the other three sides, as outlined in step 5.
8. Examine the appliance to ensure that it is sealed to the floor around the entire perimeter.

### NSF-Approved Sealants

- 3M #ECU800 Caulk
- 3M #ECU2185 Caulk
- 3M #ECU1055 Bead
- 3M #ECU1202 Bead
- Armstrong Cork – Rubber Caulk
- Products Research Co. #5000 Rubber Caulk
- G.E. Silicone Sealer
- Dow Corning Silicone Sealer

# Installation & Setup (cont.)

## Shelf Installation

**⚠ WARNING!**

**Overloading, incorrectly installing, or improperly loading shelves** can cause shelf failure and negatively affect appliance operation, resulting in appliance damage, product damage, or personal injury.

**USER ACTION!**

**For ease of installation**, True recommends installing the lower shelf first.

### Procedure

1. Determine the desired height for the shelf/pan slide.
2. Align the shelf/pan slide tabs with the notches in the front and rear pilasters at the desired height. See fig. 1.
3. Slide the tabs into the notches and verify the unit is level. See fig. 2.
4. Gently push down to lock the shelf/pan slide into position. See fig. 3.
5. Repeat steps 1-3 for the remaining shelf/pan slides. Be sure to install the slides in pairs at the same height. See fig. 4.
6. Slide the wire shelves into the top slide channels. See fig. 5. **NOTICE ›** The bottom slide channels will accommodate a product pan. See fig. 6. Product pans are not included.

### Shelf Adjustment

Shelving is adjustable for customer application. This cabinet meets the IEC Shelf Weight Capacity of 173lb (78.47kg).

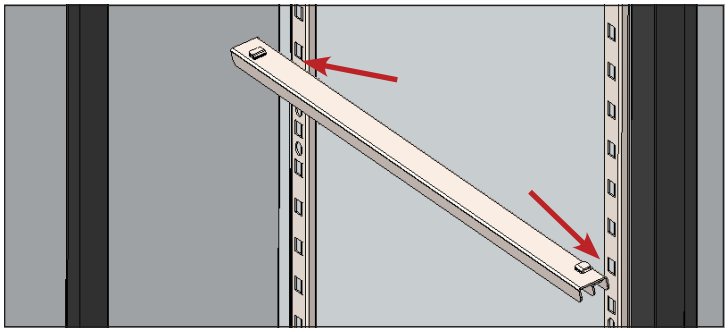

***Fig. 1.*** Line the tabs up with the notches.

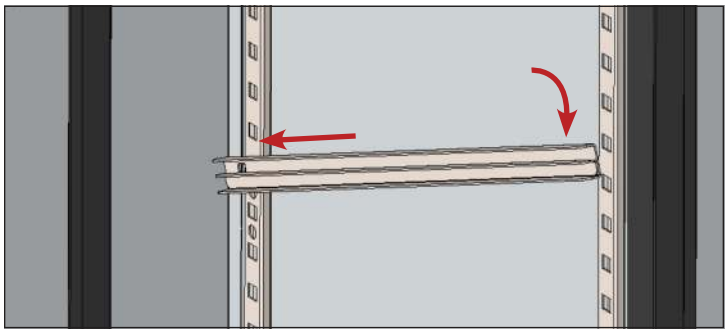

***Fig. 2.*** Position the shelf/pan slide.

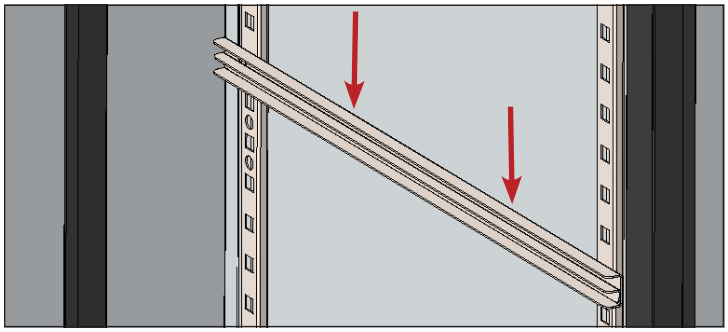

***Fig. 3.*** Push down to make sure the slide is fully seated.

# Installation & Setup (cont.)

***Fig. 4.*** Installed shelf/pan slide.

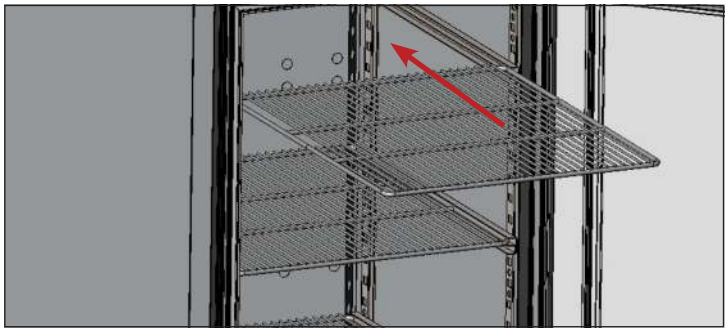

***Fig. 5.*** Position the wire shelving.

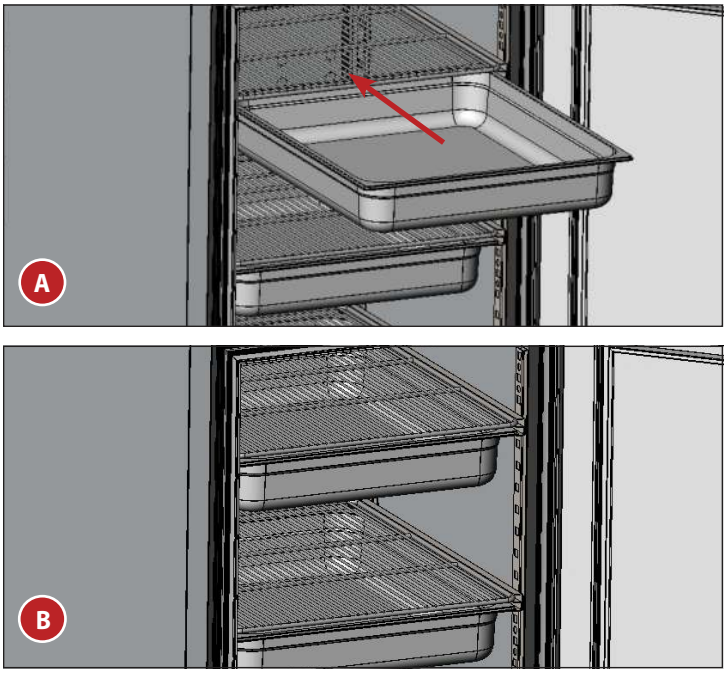


***Fig. 6.*** If desired, slide product pans into the channels. Product pans not included.

# Appliance Operation

**⚠ WARNING – SPOILAGE!**

**The owner is solely responsible** for ensuring safe holding temperature levels for all food items. Failure to do so may result in unsafe food products. Loss or spoilage of products in your appliance is not covered by warranty. In addition to following recommended installation procedures, run the appliance for 24 hours prior to usage to verify operation.

## Startup

**⚠ DANGER!**

**Risk of electric shock or fire!**

Before plugging in the appliance, be sure to inspect the main power cord and plug for damage. Immediately have a qualified technician replace damaged OEM power cords with OEM components.

**USER ACTION!**

**Before loading product**, run your TRUE appliance empty for 24 hours to verify proper operation. Remember, our factory warranty **DOES NOT** cover product loss!

- The compressor is ready to operate when the appliance is purchased. All you need to do is plug in the appliance.
- Good air flow inside your TRUE appliance is critical. Take care to prevent product from pressing against the sides or back wall and coming within 4" (101.6 mm) of the evaporator housing. Refrigerated air off the evaporator coil must circulate throughout the appliance for even product temperatures.
- Excessive tampering with the control could lead to service difficulties. If replacing the temperature control is ever needed, be sure to order the replacement from your TRUE dealer or recommended service agent.
- All covers and access panels must be in place and properly secured before operating this appliance.

# Appliance Operation (cont.)

## Temperature Control & Light Switch Location

The light symbol shows the approximate location of the light switch.

The electronic temperature control can act as a light switch. To control the light, press the up arrow M.

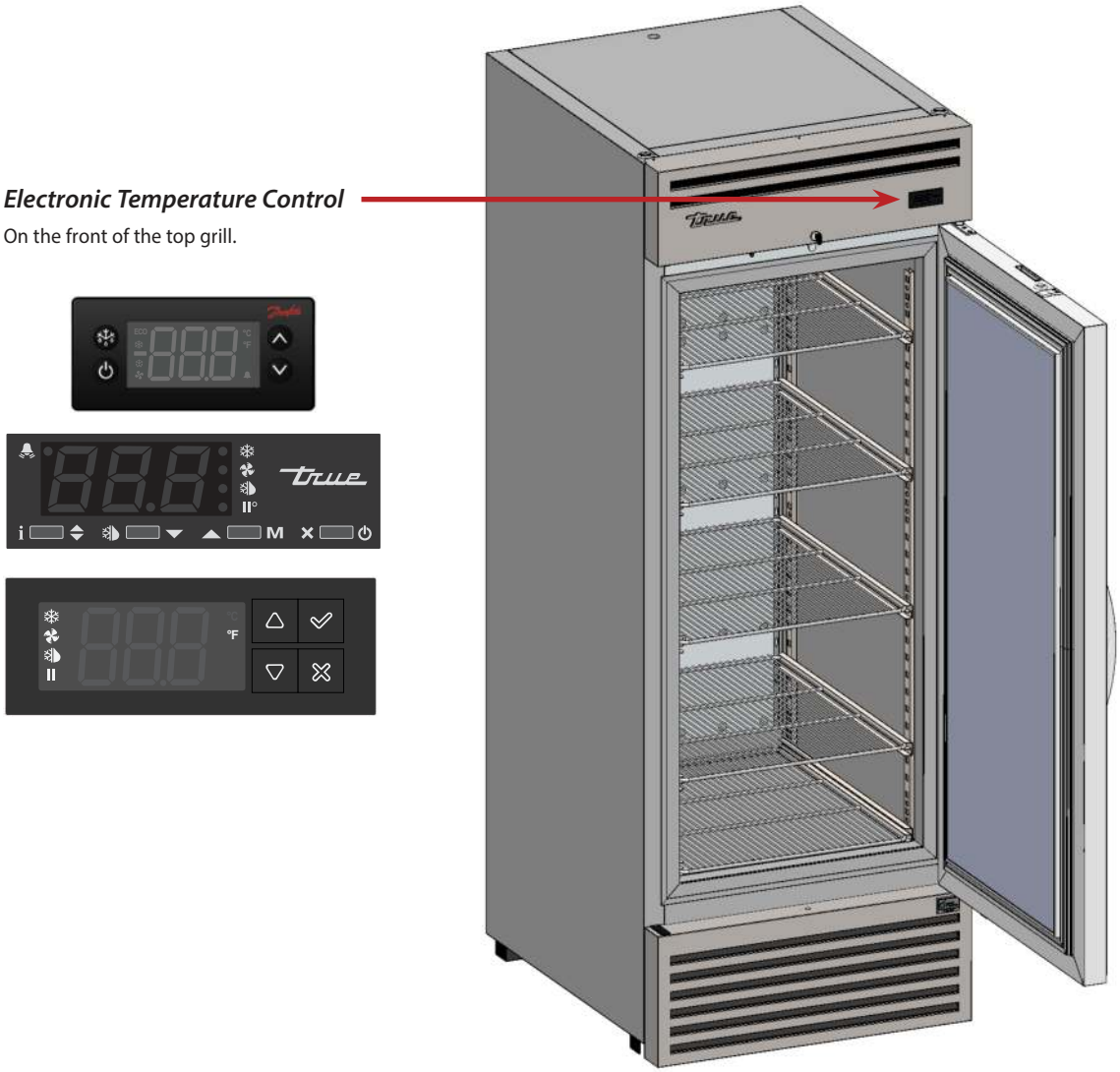

# Appliance Operation (cont.)

## General Sequence of Operation — Refrigerators & Freezers

**USER ACTION!**

**For more information** regarding an appliance's temperature control adjustment or general sequence of operation, please see our Temperature Control Adjustment—Sequence of Operation Manual in our resource library at truemfg.com/support/manuals/#panel4 or scan the **QR code**.

**When the appliance is plugged in…**

1. The interior lights illuminate on glass door models (if not, see "Light Switch Location" (pg. 19).
2. The electronic temperature control display illuminates (if installed).

**When the appliance is in refrigeration mode**

1. There may be a short delay before the compressor and/or evaporator fan(s) start. This delay may be determined by time or by temperature. This delay may also be the result of an initial defrost event that will be a minimum of six (6) min.
2. The temperature control/thermostat may cycle the compressor and evaporator fan(s) on and off together. **EXCEPTION:** models TSID, TDBD, TCGG, and TMW do not have evaporator fan(s).
3. The temperature control cycles the compressor by sensing either an evaporator coil temperature or air temperature, not a product temperature.

   **a. Mechanical Temperature Control or Electronic Temperature Control with a Knob**

   **i.** The temperature control cycles the compressor on and off as determined by the cut-in and cut-out temperatures.

   **1.** #9 is the coldest position

   **2.** #1 is the warmest position

   **3.** #0 or Off is the compressor off position

   **b. Electronic Temperature Control with a Display**

   **i.** The temperature control cycles the compressor on and off as determined by the set point and differential temperatures.

   **1.** The set point is the adjustable preprogrammed temperature designed to be either the cut-out temperature or it will match the average appliance holding temperature (only when used with a high and low differential).

   **2.** The differential temperature(s) is the non-adjustable preprogrammed temperature used to determine when the compressor turns on and off (only when the set point is the average holding temperature).
4. An analog thermometer, a digital thermometer, or an electronic control display may reflect the refrigeration cycle swings of up and down temperatures, not a product temperature. **The most accurate method to determine an appliance's operation is to verify the product temperature.**
5. There may be times during refrigeration mode or defrost mode that the condenser fan motor will reverse to blow dirt off the condenser coil.

# Appliance Operation (cont.)

## General Sequence of Operation — Refrigerators & Freezers (cont.)

**When the appliance is in defrost mode…**

1. Every appliance requires a defrost event to ensure the evaporator coil remains clear of frost and ice buildup.
2. Defrost is initiated either by the temperature control or a defrost timer.
   **EXCEPTION:** Models TDC, TFM, THDC, and TMW require a manual defrost. The frequency of this manual defrost depends on the appliance's usage and ambient conditions.

   **a. Mechanical Temperature Control**

   **i.** The temperature control cycles the compressor on and off as determined by the cut-in and cut-out temperatures.

   **1.** During this time, only the evaporator fan runs.
   **EXCEPTION:** Models TCGG, TDBD, and TSID do not have an evaporator fan(s).

   **ii.** A freezer with a mechanical temperature control will defrost by time initiation as determined by a defrost timer

   **1.** During this time, only the defrost coil heater and drain tube heater are energized.

   **2.** Defrost terminates when a specific evaporator coil temperature is reached or by a time duration.

   **iii.** Models with an analog or digital thermometer may show higher-than-normal temperatures during defrost.

   **b. Electronic Temperature Control**

   **i.** The temperature control is preprogrammed to initiate defrost by a time interval but may also be initiated by temperature demand.

   **1.** During defrost, a refrigerator turns off the compressor to use the evaporator fans to clear the evaporator coil.

   **2.** During defrost, a freezer turns off the compressor and evaporator fan to use electric heater to clear the evaporator coil.

   **ii.** The temperature with a digital display (if installed) shows dEF during defrost.

   **iii.** Models with an analog or digital thermometer may show higher than normal temperatures during defrost.

   **iv.** After defrost, there is a display delay until temperature is shown.
   **NOTICE ›** The display may have a short delay before showing a temperature after defrost has expired and may show dEF during a refrigeration cycle.

**When the appliance sounds an audible and visual alarm…**

1. Please reference the appliance's specific temperature control information in Temperature Control Adjustment — Cabinet Sequence of Operation Manual for any alarm codes.

# Maintenance & Servicing

## ⚠ DANGER!

**Risk of electric shock or burn!**

- Powering off an electronic control or setting temperature controls to the 0 (off) position **DOES NOT remove power from all components**. Unplug the appliance or disconnect power before installation or servicing.
- **DO NOT** clean appliance with a pressure washer or hose.

**Flammable refrigerant/insulation used!** Have a licensed service provider service your appliance to minimize the risk of possible ignition due to incorrect parts or improper service and to ensure the operator's health and safety.

## ⚠ WARNING!

- **Only qualified technicians** should install and service the appliance. For assistance locating a refrigeration service technician in your area for installation, servicing or maintenance, please visit our Service Company Locator at **truemfg.com/support/service-locator**.
- **Turn off and lockout all utilities** (gas, electric, water) according to approved practices during maintenance or servicing.

**The appliance owner is responsible** for performing a Personal Protective Equipment (PPE) Hazard Assessment and ensuring adequate protection during maintenance and cleaning procedures.

**Use appropriate tools**, safety equipment, and PPE during installation and servicing.

## ⚠ WARNING!

**Sharp Edges!**

- Take care when moving, installing, cleaning, servicing, and maintaining the appliance to avoid cuts. Be sure to take care when reaching under the appliance or handling metal components.
- Stay clear of pinch point areas, such as the space between appliance doors and surrounding cabinetry. Take care closing doors with children nearby.

**Crush or cut hazard!** Keep clear when uncrating, installing, moving, or servicing the appliance.

**Slippery Surfaces!** Moisture from improper drainage can create slippery surfaces near the appliance. It is your duty to immediately warn your customers of, and dry, the slippery surface. All wet floor areas must be marked with a wet floor sign.

# Maintenance & Servicing (cont.)

**NOTICE!**

- **The appliance owner is responsible** for maintaining the appliance as described in the installation manual. Routine care and maintenance procedures are not covered by TRUE's warranty.
- For additional maintenance instruction, please visit the media center at **truemfg.com**.
- Any appliance adjustments are to be made **AFTER** the appliance has been verified level and properly supported.

## Component Replacement

**USER ACTION!**

- **Replace components with** original equipment manufacturer (OEM) components such as those shown in fig. 1. OEM parts minimize the risk of possible ignition due to incorrect parts. Use of non-OEM components may void TRUE's warranty.
- **Have a licensed service provider** service your appliance to minimize the risk of possible ignition due to incorrect parts or improper service and to ensure the operator's health and safety.

***Fig. 1.*** Example of OEM parts.

# Maintenance & Servicing (cont.)

## Recommended Maintenance

See recommended maintenance tasks and frequencies below. Some tasks may be required more frequently based on your installation.

| Maintenance Tasks | Monthly | Quarterly | Annually |
|---|---|---|---|
| Verify the appliance maintains product temperature. | X | X | X |
| Inspect power cord for damage; if damaged, replace immediately. | X | X | X |
| Verify the power cord is fully plugged into the wall receptacle | | | X |
| Inspect the overall condition of the appliance and its components (such as castors, doors, and hinges). | X | X | X |
| Verify operation of all moving parts (such as fan motors, doors and door cords). | | | X |
| Check physical condition of all gaskets; verify gaskets seal correctly. | | X | X |
| Inspect any lamps, lamp holder connections, LED modules, and LED module connections. | X | X | X |
| Check all condenser coils (fronts and backs) for dust and debris; if present, clear the debris. | X | X | X |
| Check physical condition of all condenser coils and evaporator coils; straighten coil fins as needed. | | X | X |
| Check all evaporator coils for dust and debris; if present, clear the debris. | | X | X |
| Verify the drain line is clear of debris. | | X | X |

## Maintenance & Servicing (cont.)

**Model:** _____ **Serial Number:** _____

| Jan. | Feb. | Mar. | Apr. | May | Jun. | Jul. | Aug. | Sep. | Oct. | Nov. | Dec. |
|---|---|---|---|---|---|---|---|---|---|---|---|
| | | | | | | | | | | | |
| | | | | | | | | | | | |
| | | | | | | | | | | | |
| | | | | | | | | | | | |
| | | | | | | | | | | | |
| | | | | | | | | | | | |
| | | | | | | | | | | | |
| | | | | | | | | | | | |
| | | | | | | | | | | | |
| | | | | | | | | | | | |
| | | | | | | | | | | | |

# Maintenance & Servicing (cont.)

## Condenser Coil Cleaning

**⚠ DANGER!**

**Risk of electric shock or burn!**

- Unplug the appliance or disconnect power before installation or servicing.
- **DO NOT** clean appliance with a pressure washer or hose.

**⚠ WARNING!**

**The appliance owner is responsible** for performing a Personal Protective Equipment (PPE) Hazard Assessment and ensuring adequate protection during maintenance and cleaning procedures.

**Use appropriate tools**, safety equipment, and PPE during installation and servicing.

**Sharp edges!** Coil fins are sharp and metal components can have sharp edges. Take care when moving, installing, cleaning, servicing, and maintaining the appliance to avoid cuts.

**Risk of eye injury!** Airborne dust and debris can cause eye injury. Eye protection recommended.

**USER ACTION!**

**DO NOT** place any filter material in front of the condensing coil.

**NOTICE!**

The cleaning of the condenser coil is not covered by warranty!

### Required Tools

Required tools include (but may not be limited to) the following:

- Phillips screwdriver or bit driver
- 1/4" nut driver
- 3/8" nut driver
- Stiff bristle brush
- Tank of compressed air
- Vacuum cleaner
- Flashlight
- Eye protection
- Gloves

### Procedure

1. Disconnect power to appliance.
2. Remove the front louvered grill from the appliance. See fig. 1-2.
3. With a stiff bristle brush, carefully clean accumulated dirt from the front condenser coil fins. See fig. 3.
4. With dirt removed from the surface of the coil, use a flashlight to verify that you can see through the coil and observe the condenser fan blade spinning. See fig. 4.

   If the view is clear, reinstall louvered grill, connect appliance to power and verify operation. If the view is still blocked with dirt, proceed to step 5.
5. Remove the condenser base bolts. See fig. 5.
6. Remove the condenser coil brackets (if applicable).
7. Carefully slide the condensing appliance out (tubing connections are flexible). See fig. 6. Gently blow compressed air or $CO_2$ through the coil until it is clean.
8. Carefully vacuum any dirt around and behind the condensing appliance area.
9. Reinstall the coil brackets (if applicable). Then carefully slide the compressor assembly back into position and bolt it in place. See fig. 7.
10. Reinstall the louvered grill, connect power to the appliance, and verify operation.

## Maintenance & Servicing (cont.)

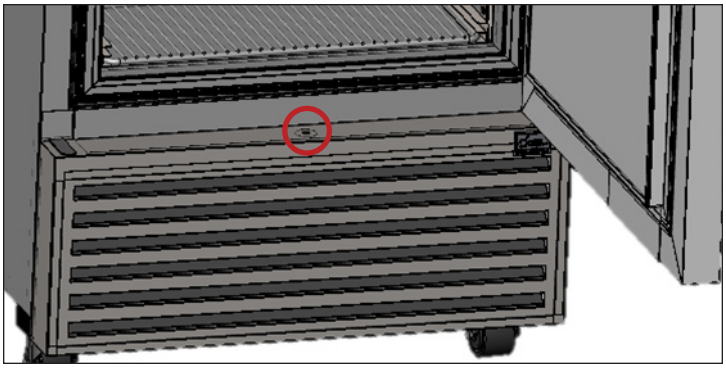

***Fig. 1.*** Swing door louver grill screw location.

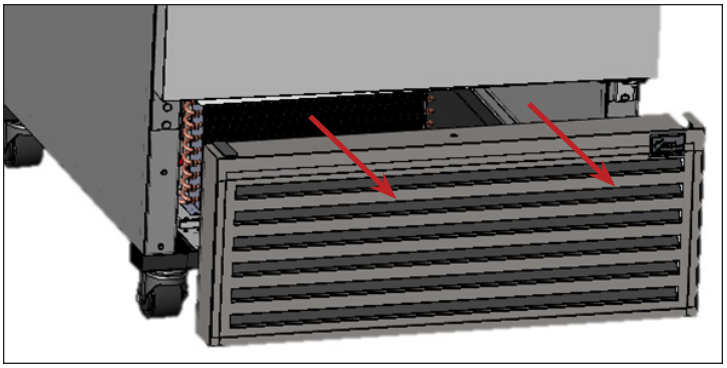

***Fig. 2.*** Carefully remove the grill.

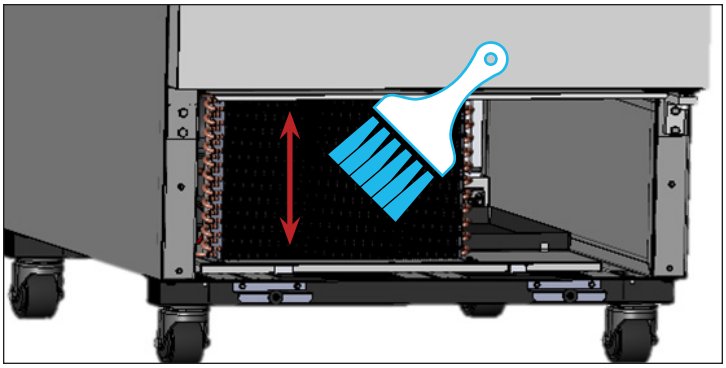

***Fig. 3.*** Never brush across the coil fins.

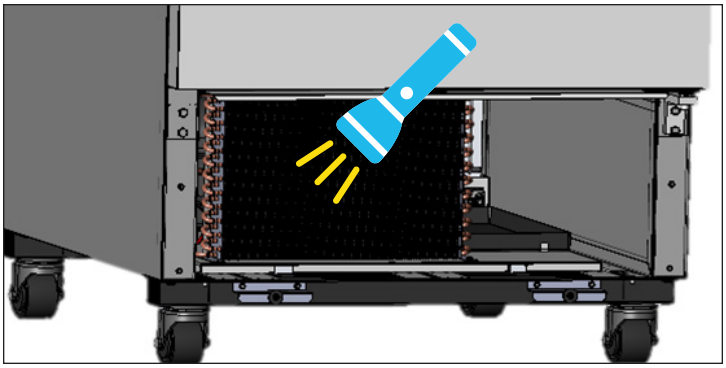

***Fig. 4.*** Verify all blockages have been removed.

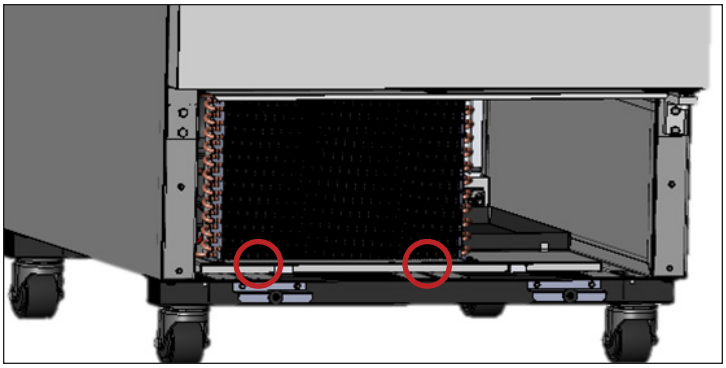

***Fig. 5.*** Remove condenser base bolts.

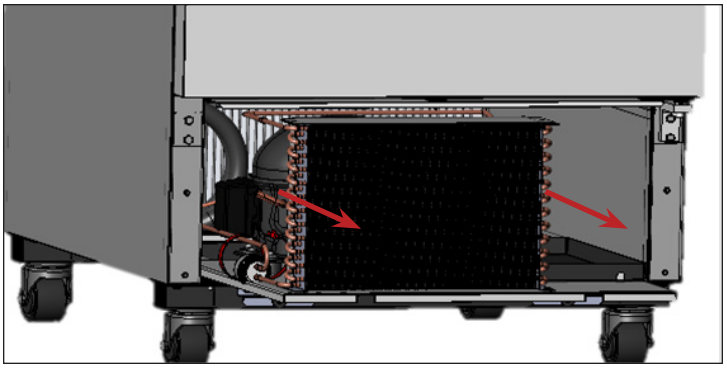

***Fig. 6.*** Carefully slide the condensing unit out.

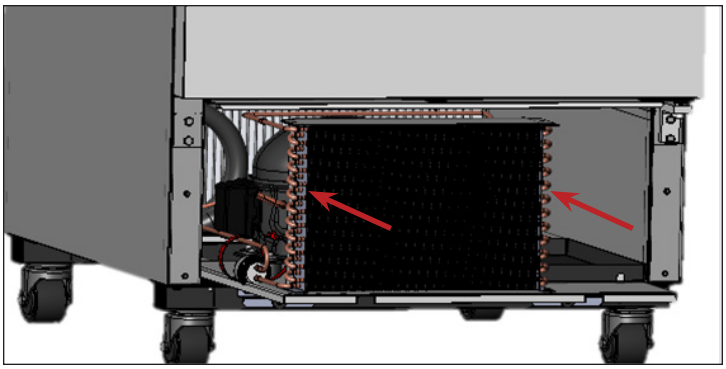

***Fig. 7.*** Carefully slide the condensing unit back into position and reinstall the bolts.

# Maintenance & Servicing (cont.)

## General Surface Care & Cleaning

**⚠ DANGER!**

**Risk of electric shock or fire!**

- **DO NOT** clean appliance with a pressure washer or hose.

**⚠ WARNING!**

**Slippery Surfaces!** Moisture from improper drainage can create slippery surfaces near the appliance. It is your duty to immediately warn your customers of, and dry, the slippery surface. All wet floor areas must be marked with a wet floor sign.

**The appliance owner is responsible** for performing a Personal Protective Equipment (PPE) Hazard Assessment and ensuring adequate protection during maintenance and cleaning procedures.

**Use appropriate tools**, safety equipment, and PPE during installation and servicing.

**USER ACTION**

**DO NOT USE CITRUS-BASED CLEANERS ON GLASS DOORS.**

### Gaskets

- Clean gaskets with warm soapy water.
- **DO NOT** use sharp tools or knives to scrape a gasket.
- Avoid full-strength cleaning products.

### Glass

- Clean glass with a mild glass cleaner. **DO NOT** use citrus-based cleaners.

### Interior

- Clean interior surfaces with a mild solution of baking soda and water to help reduce odor; **DO NOT** use harsh or abrasive cleaners.
- For plastic or powder-coated parts, use warm soapy water to clean **DO NOT** use stainless steel cleaners or similar solvents.

### Exterior

- For plastic or powder-coated parts, use warm soapy water to clean **DO NOT** use stainless steel cleaners or similar solvents.
- **DO NOT** clean stainless steel with steel wool or abrasive products. **DO NOT** use detergents or degreasers with chlorides or phosphates. See model-specific manual for more information.

# Maintenance & Servicing (cont.)

## Stainless Steel Care & Cleaning

**USER ACTION**

**DO NOT USE ANY STEEL WOOL, ABRASIVE, OR CHLORINE-BASED PRODUCTS TO CLEAN STAINLESS STEEL SURFACES.**

### Stainless Steel Opponents

There are three basic things which can break down your stainless steel's passivity layer and allow corrosion to form.

- Scratches from wire brushes, scrapers, steel pads, and other items that can be abrasive to stainless steel's surface.
- Deposits left on your stainless steel can leave spots. You may have hard or soft water depending on what part of the country you live in. Hard water can leave spots. Hard water that is heated can leave deposits if left to sit too long. These deposits can cause the passive layer to break down and rust your stainless steel. All deposits left from food prep or service should be removed as soon as possible.
- Chlorides which are present in table salt, food and water, as well as in household and industrial cleaners. These are the worst type of chlorides to use on stainless steel.

### Stainless Steel Cleaning and Restoration

Stainless steel cleaners must be free of phosphates, chlorine, chloride, and ammonia.

True offers environmentally-friendly cleaner and polish through our True Store at **store.trueresidential.com/products/stainless-steel-clean-polish-kit.**

### Custom Painted Appliance and Hardware

For painted doors and other surfaces, use a mild solution of soap and water with a soft microfiber cloth.

# Maintenance & Servicing (cont.)

## 8 Tips to Help Prevent Rust on Stainless Steel

### Maintain the Cleanliness of Your Equipment

Avoid build-up of hard stains by cleaning frequently. Use cleaners at the recommended strength (alkaline chlorinated or non-chloride).

### Use the Correct Cleaning Tools

Use non-abrasive tools when cleaning your stainless steel products. The stainless steel's passive layer will not be harmed by soft cloths and plastic scouring pads.

### Clean Along Polishing Lines

Polishing lines ("grain") are visible on some stainless steels. Always scrub parallel to polishing lines when visible. Use a plastic scouring pad or soft cloth when you cannot see the grain.

### Use Alkaline, Alkaline-Chlorinated or Non-Chloride Cleaners

While many traditional cleaners are loaded with chlorides, the industry is providing an ever increasing choice of non-chloride cleaners. If you are not sure of your cleaner's chloride content, contact your cleaner supplier. If they tell you that your present cleaner contains chlorides, ask if they have an alternative. Avoid cleaners containing quaternary salts, as they can attack stainless steel, causing pitting and rusting.

### Rinse

When using chlorinated cleaners, you must rinse and wipe dry immediately. It is better to wipe standing cleaning agents and water as soon as possible. Allow the stainless steel equipment to air dry. Oxygen helps maintain the passivity film on stainless steel.

### Never Use Hydrochloric Acid (Muriatic Acid) on Stainless Steel

Even diluted, hydrochloric acid can cause corrosion, pitting and stress corrosion cracking of stainless steel.

### Water Treatment

To reduce deposits, soften hard water when possible. Installation of certain filters can remove corrosive and distasteful elements. Salts in a properly maintained water softener can also be to your advantage. Contact a treatment specialist if you are not sure of the proper water treatment.

### Regularly Restore & Passivate Stainless Steel

Stainless steel gets its stainless properties from the protective chromium oxides on its surface. If these oxides are removed by scouring, or by reaction with harmful chemicals, then the iron in the steel is exposed and can begin to oxidize, or rust. Passivation is a chemical process that removes free iron and other contaminants from the surface of stainless steel, allowing the protective chromium oxides to re-form.

## Warranty Information (USA & Canada Only)

# Warranty Information

**To view and download the Warranty Information for USA & Canada, please scan the QR code below.**

truemfg.com